TIREBOSS® 2
Tire Pressure Control

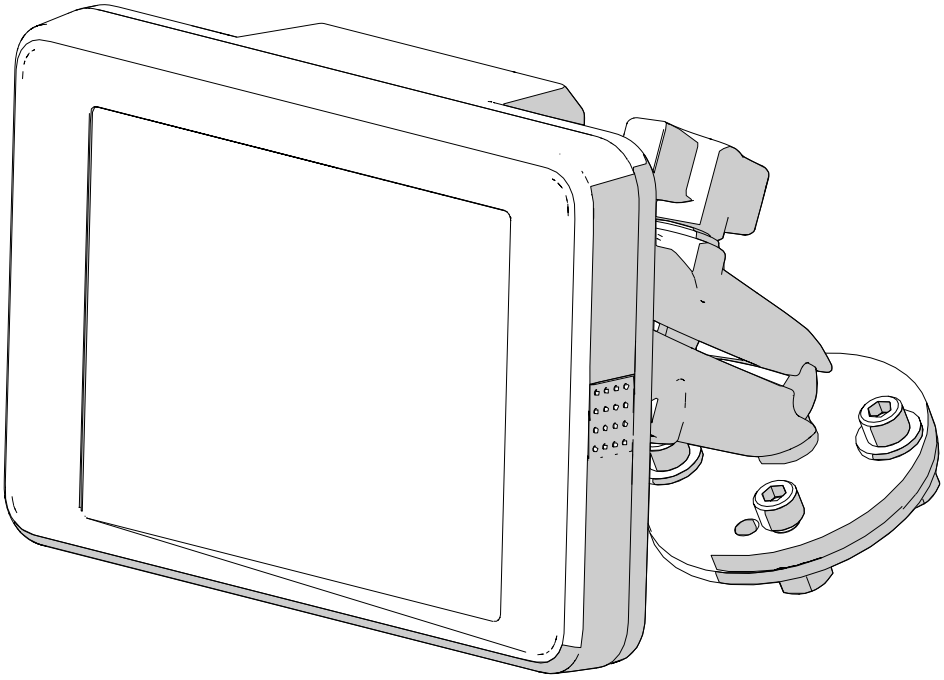

TB2 Service Manual

Version 2.4 | Current as of January, 2025

This is a working document that is subject to change without notice

Contact TPC International with any inquries at;

15803-121A Ave., Edmonton, Alberta, Canada T5V 1B1

Toll Free Phone: North America 1-888-338-3587

Toll Free Phone: United Kingdom 08000-155-612

New Zealand 1-800-443-971 | Australia 1-800-148-694

Phone: +1 (780) 451-4894 | Fax: +1 (780) 452-6786

Email: info@tireboss.com

Table of Contents

Safety Information & Disclaimers III
System Descriptions V
Safety Systems VI
Chapter 1 - System Schematics;
Truck Overview 1-1
System Overview 1-2
Air Supply Pneumatics - Standard Dryer 1-6
Air Supply Pneumatics - AD-IS/AD-HF Dryer 1-7
Air Supply Pneumatics - Dual Dryer 1-8

Chapter 2 - Adjustments, Settings & Maintenance;
Monthly Service Inspection 2-1
Annual Service Inspection 2-2
Internal Battery Replacement for OCU 2-4
Adjusting the Pressure Protection Valve [PPV] 2-5
Adjusting the Air Compressor Governor 2-8
Rotary Union Maintenance 2-12
WEV Plate Maintenance 2-16
Valve Service Procedure 2-19
Replacing/Upgrading SCU 2-33
Replacing VCU Main Board 2-35

Chapter 3 - Operations;
Operators Control Unit [OCU] Controls 3-1
Selecting Applications 3-3
Enabling / Disabling Applications 3-3
New Configuration Download 3-5
Editing Load Sense Pressure 3-6
Connecting OCU to Wifi 3-7
Adding a New Network to OCU 3-8
Connecting as 'TPC-Tech' 3-8
Creating a 'TPC-Tech' Hotspot on IOS Devices 3-8
Creating a 'TPC-Tech' Hotspot on Android Devices 3-9
Diagnostic Mode 3-10

Chapter 4 - Programming & Updates;
Identifying Software Packages: Stable Release 4-1
Version Error vs. Configuration Error 4-3
Field OCU & SCU Replacements 4-5
Firmware / Software Updates 4-7

Chapter 5 - Trouble-Shooting Guide;
Wiring Pinout - All Cables 5-1
Power Flow Introduction 5-11
Power Flow Testing 5-13
Alarm Code Diagnostic Chart 5-18

OCU Diagnostic Lights..... 5-33
SCU V2 Diagnostic Plug 5-35
Valve Board Schematic and Testing..... 5-38
Striped Screen Troubleshooting..... 5-40

Before you begin;

Read, Understand and Comply with;

- All Instructions and procedures,
- Companies maintenance intervals, service routines, installation and diagnostic procedures
- Vehicle manufacturers safety instructions when working on vehicles,
- Vehicle manufacturers safety and best practice guidelines not included or described in service procedure,
- Local safety regulations

During Service;

- Work should only be carried out by trained personnel
- Use only recommended parts, tools, and procedures

Upon Completing Service;

- All vehicles should be thoroughly tested and inspected before being released back into service
- Ensure the date and service type is noted on the log sheet located inside of the SCU cover

Safety Notice;

Proper maintenance, service and repair is important for the reliable and safe operation of Tire Pressure Control International Ltd.'s [henceforth known as "**TPC International**"] ***TIREBOSS® 2*** **Tire Pressure Control** system. Systems that lack or have poor service and maintenance intervals have a higher potential for failure with potentially devastating circumstances. Failure of the control system could place additional stress on different systems within the vehicle causing them to be worn in ways they were not designed for and creating a dangerous situation. This includes, but is not limited to, vehicle tires, suspension system, pneumatic system, electrical system, etc. The procedures outlined in this guide are preventive and should be considered as part of regular maintenance in order to ensure the health and good operation of the system. Due to the technical nature of the procedure outlined in this guide, service should be performed with extreme caution by trained individuals only.

Disclaimer;

The description and specifications outlined in this service procedure are current as of the date indicated on the front cover. **TPC International** reserves the right to modify, revise, or discontinue components that may be used throughout the procedure without notice to customers. This right will be reserved for instances where the technical development team at **TPC International** devises a solution it deems to be more appropriate. Contact **TPC International** if you believe a change has been made to your system (since the date of this procedure). Any reference to brand names seen in this publication are made as an example of the recommended products used and should not be considered as an endorsement. Alternative's to these products can be used as long they are verified to be of a) a similar chemical composition, b) will not damage existing hardware, and c) will serve the same purpose as the recommended product. Only genuine ***TIREBOSS® 2*** replacement parts can be used in order to maintain warranty. Failure to use genuine ***TIREBOSS® 2*** replacement parts can also have adverse effects and create critical issues within the system. Every effort has been made to ensure the accuracy of the following procedure, however **TPC International** makes no expressed or implied warranty claims based on the enclosed information. **TPC International** will also not be liable for any incidental or indirect damages or consequential damages incurred by following this procedure.

Contact TPC International;

Email: info@tireboss.com

Phone Number: +1 (780) 451-4894

Toll Free:

1 (888) 338 3587 [North America]

1 (800) 148 694 [Australia]

0 (800) 443 971 [New Zealand]

0 (8000) 155 612 [United Kingdom]



Important Information

The TIREBOSS 2 system is a Tire Pressure Control System that monitors and controls tire pressures.

- References to system components contained within this manual are as follows;

***OCU** - **O**perator **C**ontrol **U**nit*
***SCU** - **S**ystem **C**ontrol **U**nit*
***VCU** - **V**alve **C**ontrol **U**nit*
***WEV** - **W**heel **E**nd **V**alve*

- The OCU must remain on at all times while the vehicle is in motion.
- Ensure all manual wheel end valves are opened before moving the vehicle.
- If service work is being performed that requires the removal of wheels & tires, ensure valve core stems are removed prior to reconnecting the TIREBOSS system.

System Description

INTRODUCTION

The Tireboss 2 system is a second generation of the TIREBOSS® product, that provides the ability to change tire pressure in one or more groups of tires while the vehicle is in operation. The primary improvements in Tireboss 2 over the original Tireboss 1 system are:

- *The algorithm by which it measures and controls the tire pressure. This is a significant advancement by effectively learning how the vehicle air supply and tire groups are configured and optimizing the inflation and deflation control of the tires, while continually learning and tuning these parameters during normal operation.*
- *It also offers the ability to autonomously control tire pressures without operator intervention where that functionality is required.*
- *The ability to perform updates and upgrades remotely through Wi-Fi is also incorporated in Tireboss 2.*

OVERVIEW

The Tireboss 2 system consists of the Operator Control Unit (OCU), the System Control Unit (SCU), and one or more Valve Control Units (VCUs)

The OCU provides the operator interface to the system allowing configuration, selection of operating modes, reporting of alarm conditions, data logging, remote access and system maintenance functions. It displays system parameters in a convenient, user-friendly manner. It is basically a specialized touchscreen computer.

The OCU provides GPS information to the system, most importantly for vehicle speed (which is used to monitor speed limits for various tire pressures and loads, and initiate auto inflations in the case of over speed conditions for the current selections), as well as location information and time for logging purposes. It has an RS-485 interface to the System Controller, as well as a Wi-Fi radio for data transfer and program updates. The OCU receives switched power from the vehicle.

The SCU is the heart of the system. It coordinates all aspects of system operation, accepting commands from and reporting to the OCU as well as controlling the other system components. It measures air pressures from both the vehicle air supply (for safety purposes) and from the suspension air bags (if the vehicle is so equipped) for load sensing, providing Standard Autonomous Operation capability. It also serves as a "black box" data recorder for critical system information and provides the interface to an optional external data logger.

One or more VCUs control pressure in defined group(s) of tires. The VCUs communicate with the SCU over a daisy-chained Local Interconnect Network (LIN) bus. The system can currently accommodate up to 4 valves. Each VCU provides pressure control and monitoring, automatic heater control (to prevent valve icing in cold temperatures) and fault handling for one group of tires.

Safety Features

The TIREBOSS 2 Tire Pressure Control system [TPCS] incorporates a number of extremely important safety features to ensure the integrity of the vehicle, tires and the safety of everyone on the highways. These include features dealing with the following aspect of operation.

1. VEHICLE OVERSPEED CONDITION

If the vehicle's speed exceeds the set point for the current selected tire pressure, the OVERSPEED CONDITION alert screen will be displayed and an audible alarm will sound alerting the operator of a vehicle OVERSPEED CONDITION. If the vehicle OVERSPEED CONDITION persists for a specified period, typically 30 seconds (this period is adjustable), the system will automatically increase the selected pressure setting upward to the next higher tire pressure for the selected load.

2. LOW AIR BRAKE SUPPLY PRESSURE

A pressure protection valve and an electronic safety switch make sure that air is available for tire inflations only when vehicle system air brake pressure is above a safe level (95 psi). If the air brake pressure falls below a safe level, the LOW BRAKE AIR PRESSURE alert will be dislayed and the air supply shut off to the TPCS. The supply of compressed air to the veicle air brake system always has priority over the TPCS.

3. LOSS OF TIRE PRESSURE

When an unexplained drop in tire pressure takes place in any of the zones, an audible alarm will sound. The tire pressure status display on the operator control unit will highlight the zone display in which the loss of tire pressure has occured and it will display the TIRE PRESSURE LOSS alert continuously. The source of pressure drop must be located prior to continuing operation so that the appropriate action may be taken, such as isolating the problem tire from the rest of those in the zone, through the use of manual shutoff valves.

4. AIR FLOW RESTRICTION

The TIREBOSS 2 system is designed to work normally with all wheel end valves open maintaining constant monitoring & control of tire pressures. If the valves are left in a closed position, the system only senses line pressures and begins inflating & deflating past the set point pressure. The repetitive action will cause the AIR FLOW RESTRICTION alert to be activated. This alert will continue until the valves are re-opened allowing normal operation to resume.

5. TIRE OVER-PRESSURE

The TIREBOSS system automatically assigns upper limits to the programmable set points. The system will trim the tire pressures for a preset time, after a new selection is made, to hone in on the new setting. Following the initial "trimming" time, the tire pressures are allowed to increase above the trim tolerance to allow for normal heat build up. If the tire pressure exceeds a maximum limit, the TIRE OVER-PRESSURE ALERT will be displayed indicating an overheat condition in the tire which may be caused from impropoer pressure settings or a failure of other vehicle components, such as the brakes overheating.

6. LOAD SENSING FEATURE (ONLY APPLICABLE TO AIR SUSPENSION EQUIPPED VEHICLES)

Vehicles equipped with air suspension on the drive axles can be fitted with a load sensing option. A load sensing pressure switch indicates to the control system when the vehicle is loaded and will not allow any of the unloaded settings to be selected. This feature limits the selections to the driver and ensures only the appropriate tire pressures are being used for the current vehicle load.

In addition to the system safety features outlined above, it should be noted that the TIREBOSS 2 systems use only quality components, such as DOT approved drive axle air hosing. The TPCS computer continously monitors tire pressure and controls the inflating, deflating, or maintaining of a preselected target tire pressure. The systems carry operational decaling, which is further explained in the operators manual carried in each vehicle.

SECTION 1

SYSTEM SCHEMATICS

Truck Overview Schematic

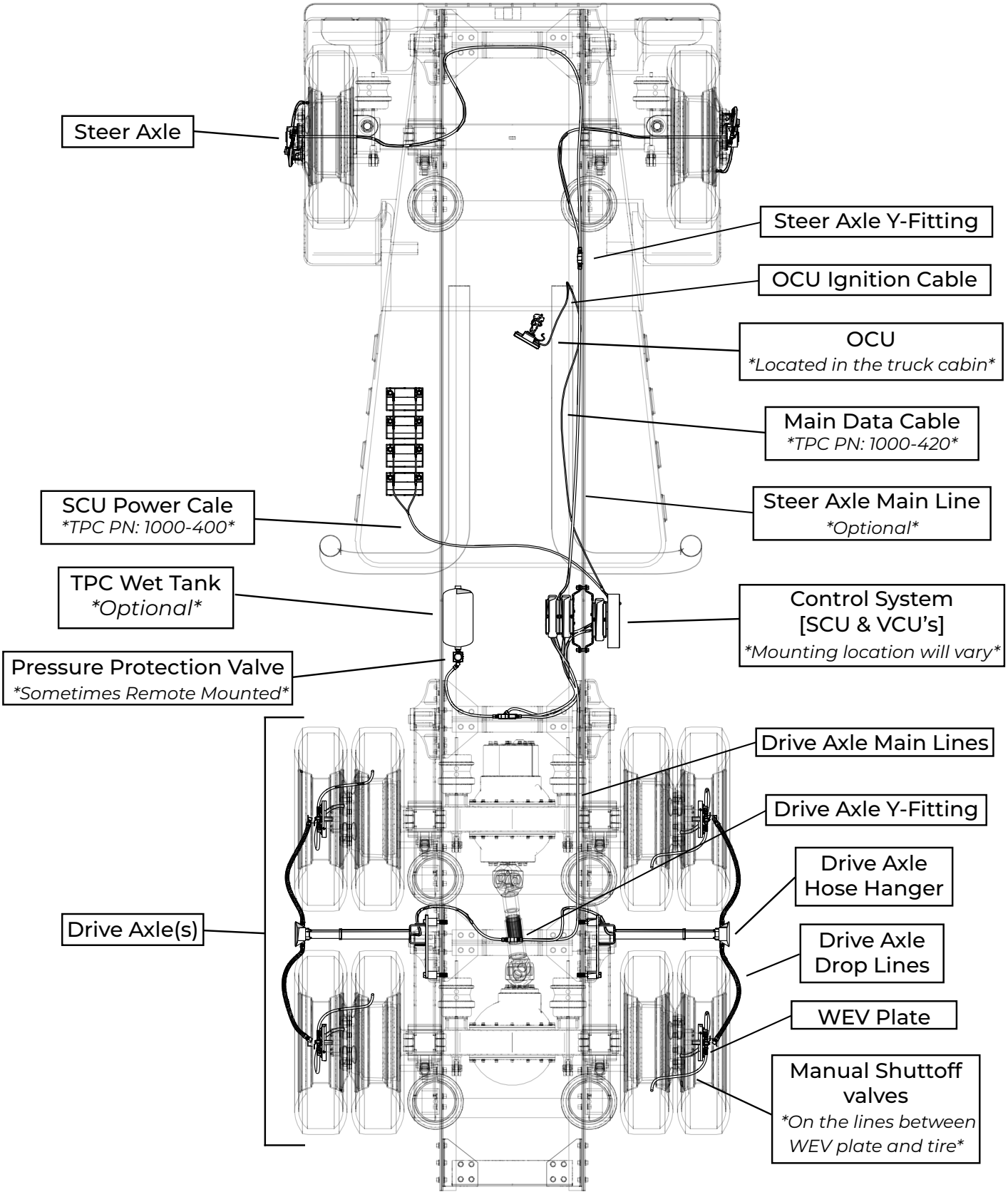

WITH SCU-V1

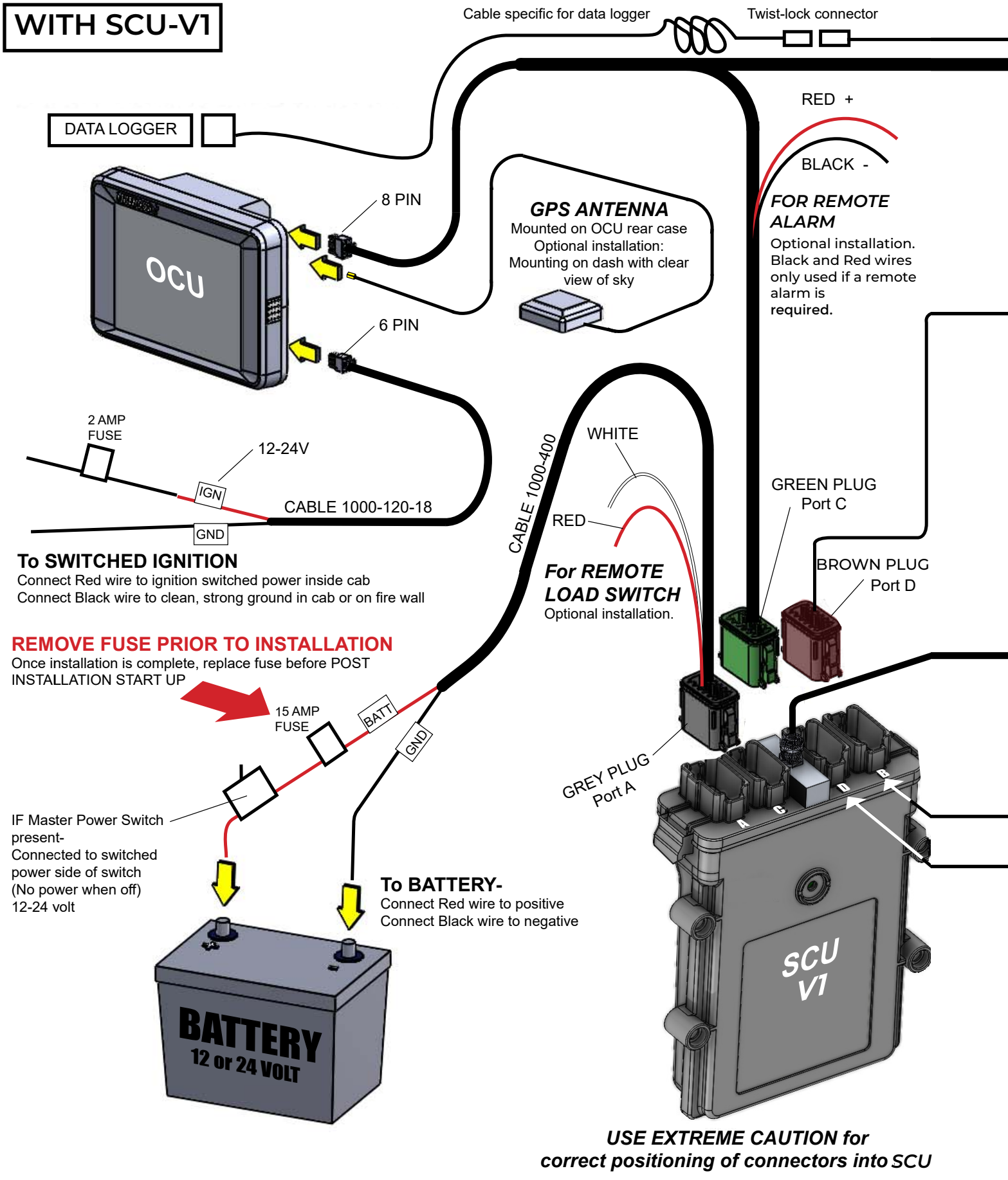

USE EXTREME CAUTION for correct positioning of connectors into SCU

VALVES - (UP TO FOUR)
To connect an additional valve or valves, use cable 1000-440.
Use plug on final port

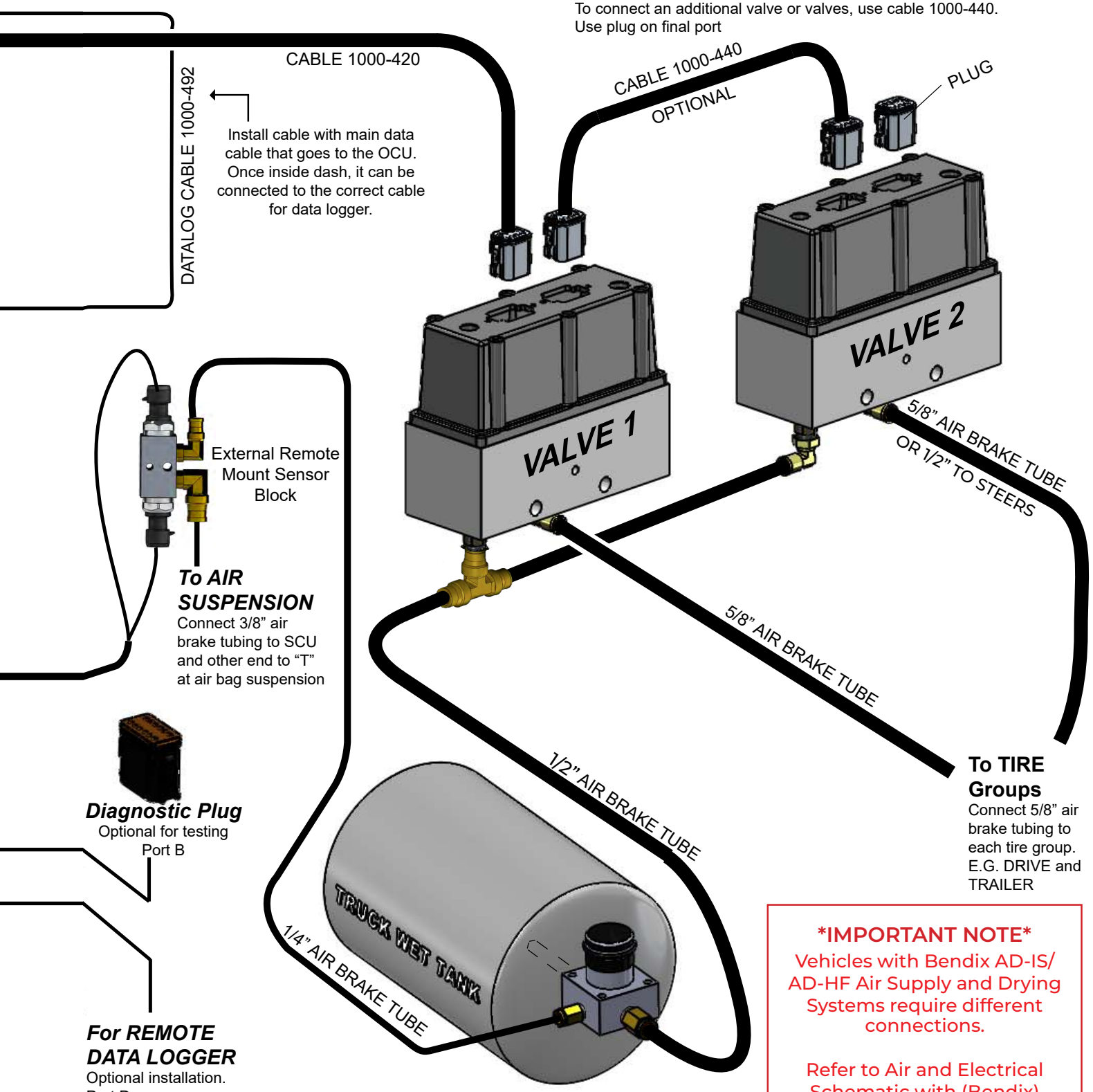

To TIRE Groups
Connect 5/8" air brake tubing to each tire group. E.G. DRIVE and TRAILER

PPV MOUNTING Options -
When installing directly to wet tank, ensure standpipe is installed inside wet tank.
When installing remotely, use mounting bracket kit.

IMPORTANT NOTE
Vehicles with Bendix AD-IS/ AD-HF Air Supply and Drying Systems require different connections.

Refer to Air and Electrical Schematic with (Bendix) AD-IS/AD-HF Dryer.

WITH SCU-V2

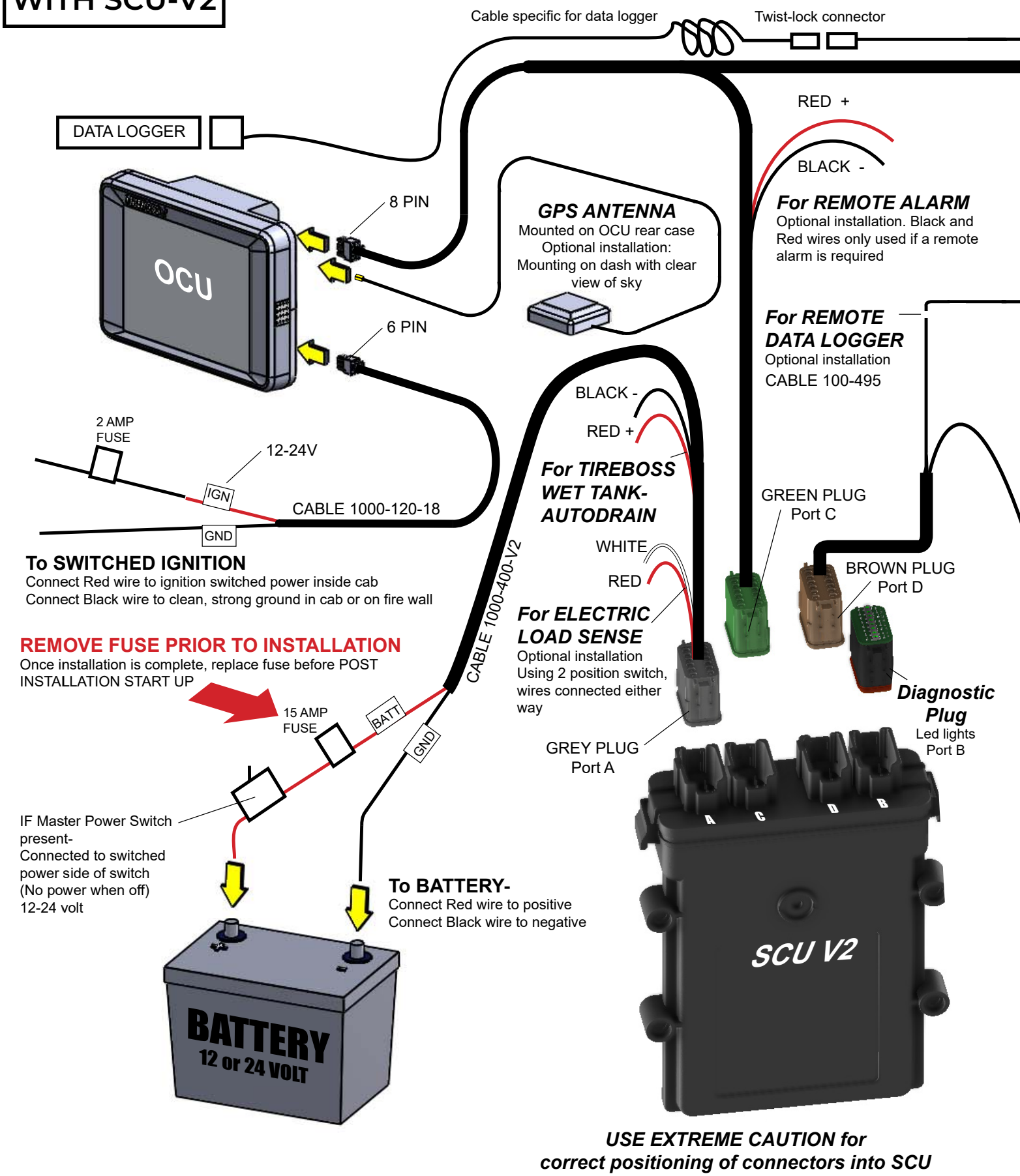

USE EXTREME CAUTION for correct positioning of connectors into SCU

Applicable for SCU V2 starting August 2024, with System Serial No (SSN) 02944

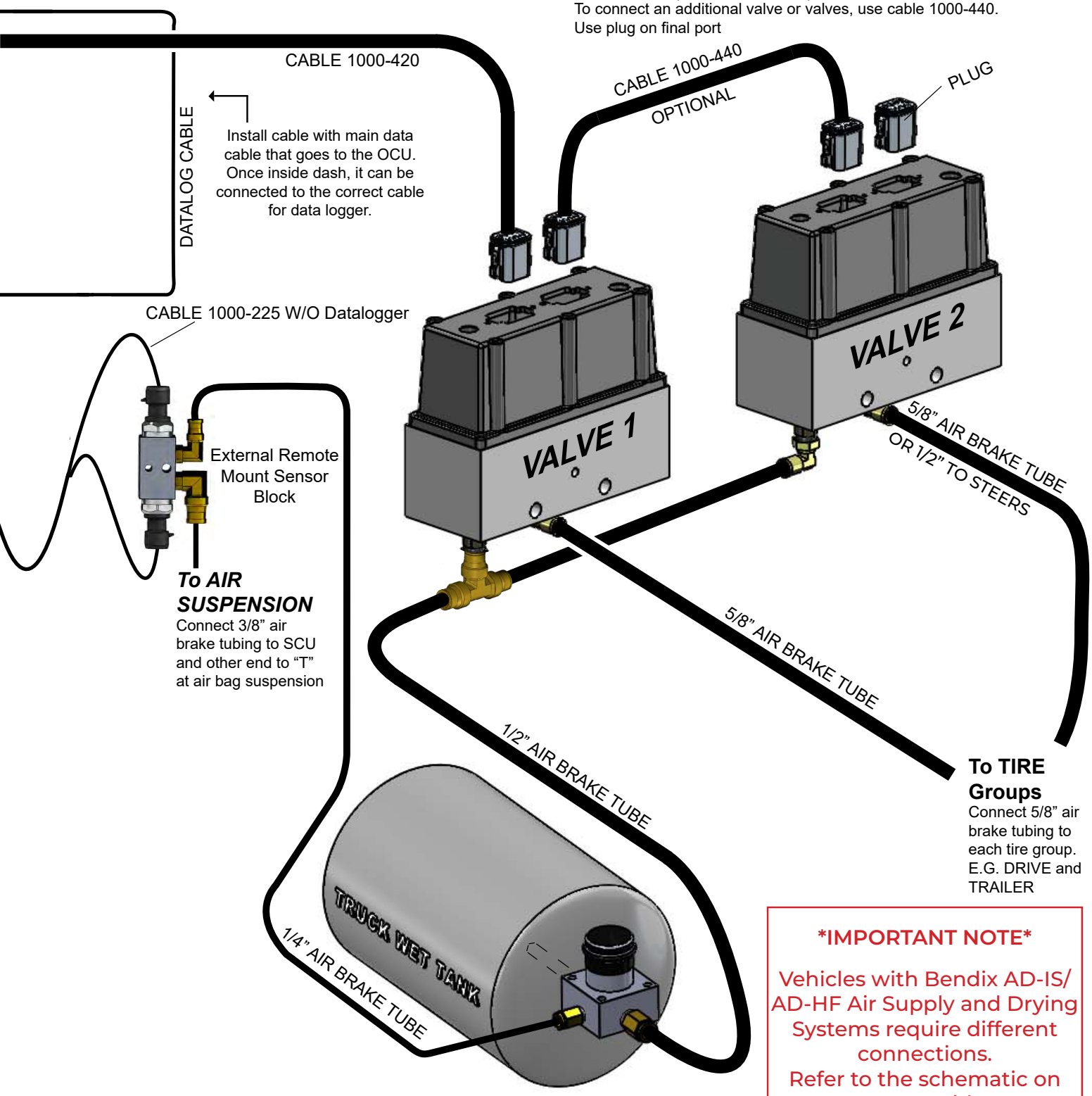

PPV MOUNTING Options -
When installing directly to wet tank, ensure standpipe is installed inside wet tank.
When installing remotely, use mounting bracket kit.

IMPORTANT NOTE

Vehicles with Bendix AD-IS/ AD-HF Air Supply and Drying Systems require different connections.
Refer to the schematic on reverse side.

Conventional Pneumatic Schematic

FOR SCU-V1

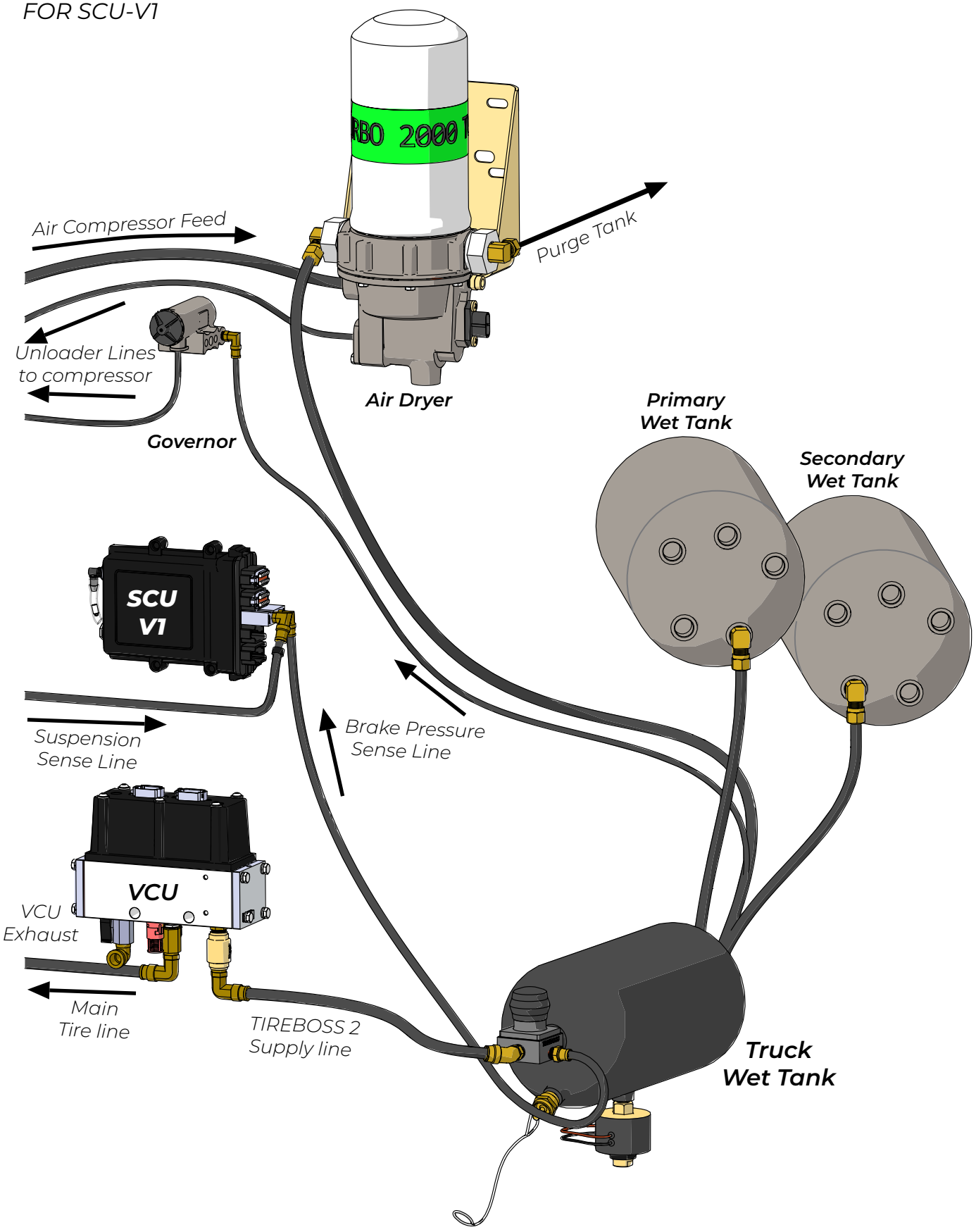

Conventional Pneumatic Schematic

FOR SCU-V2

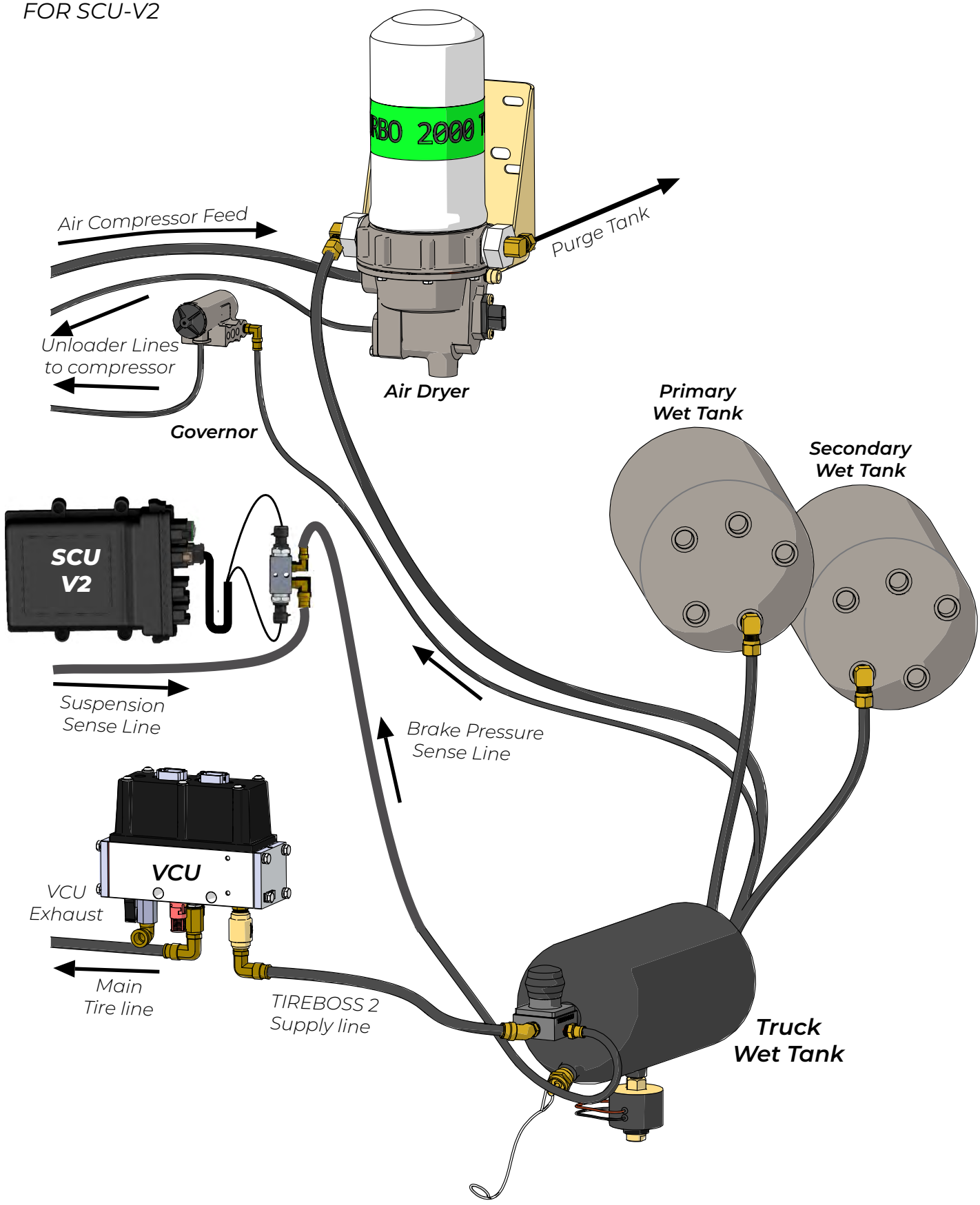

AD-IS/AD-HF Dryer Pneumatic Schematic

FOR SCU-V1

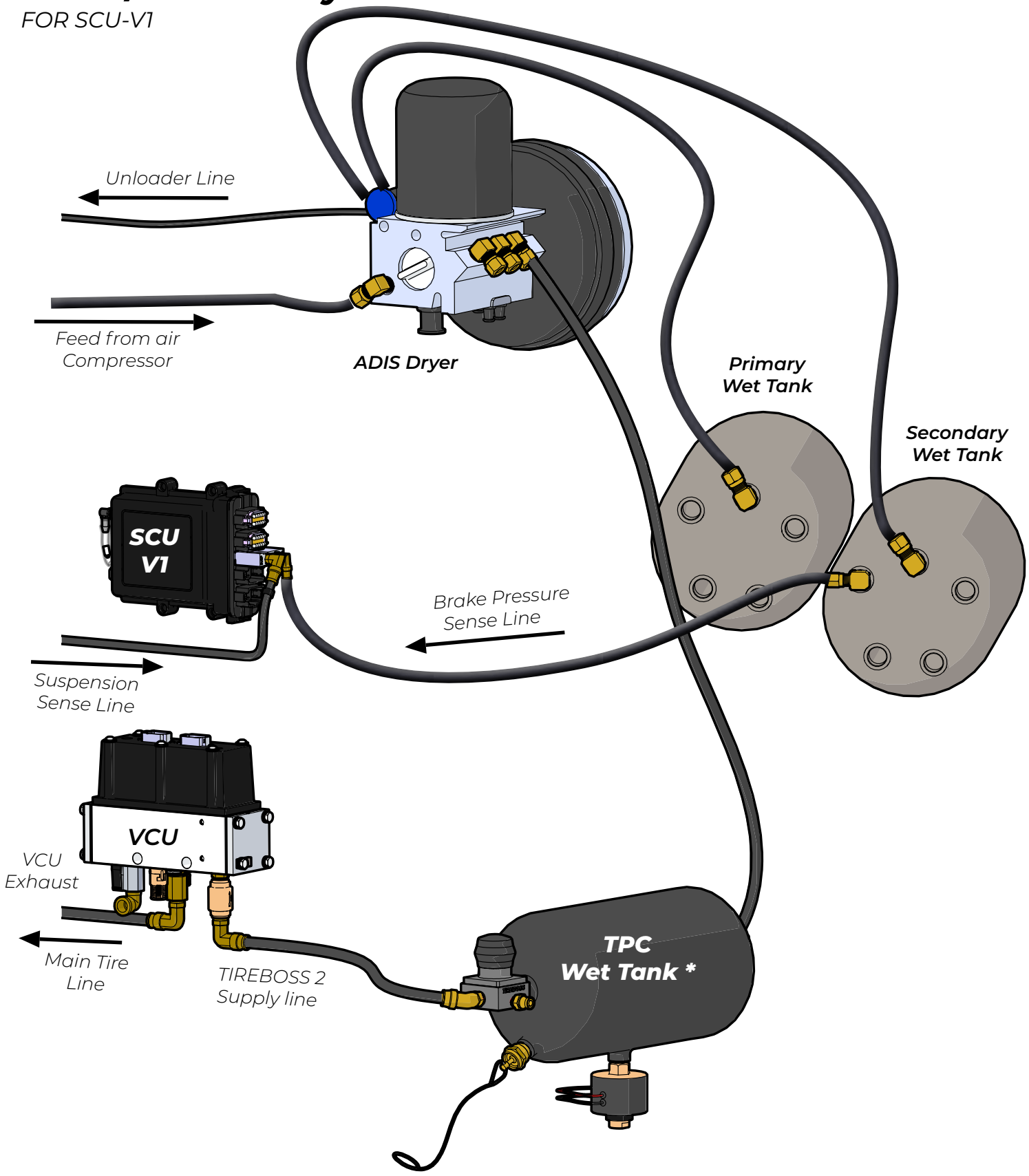

*In ADIS systems, TPC Wet Tanks are an optional component with the PPV being remote mounted

AD-IS/AD-HF Dryer Pneumatic Schematic

FOR SCU-V2

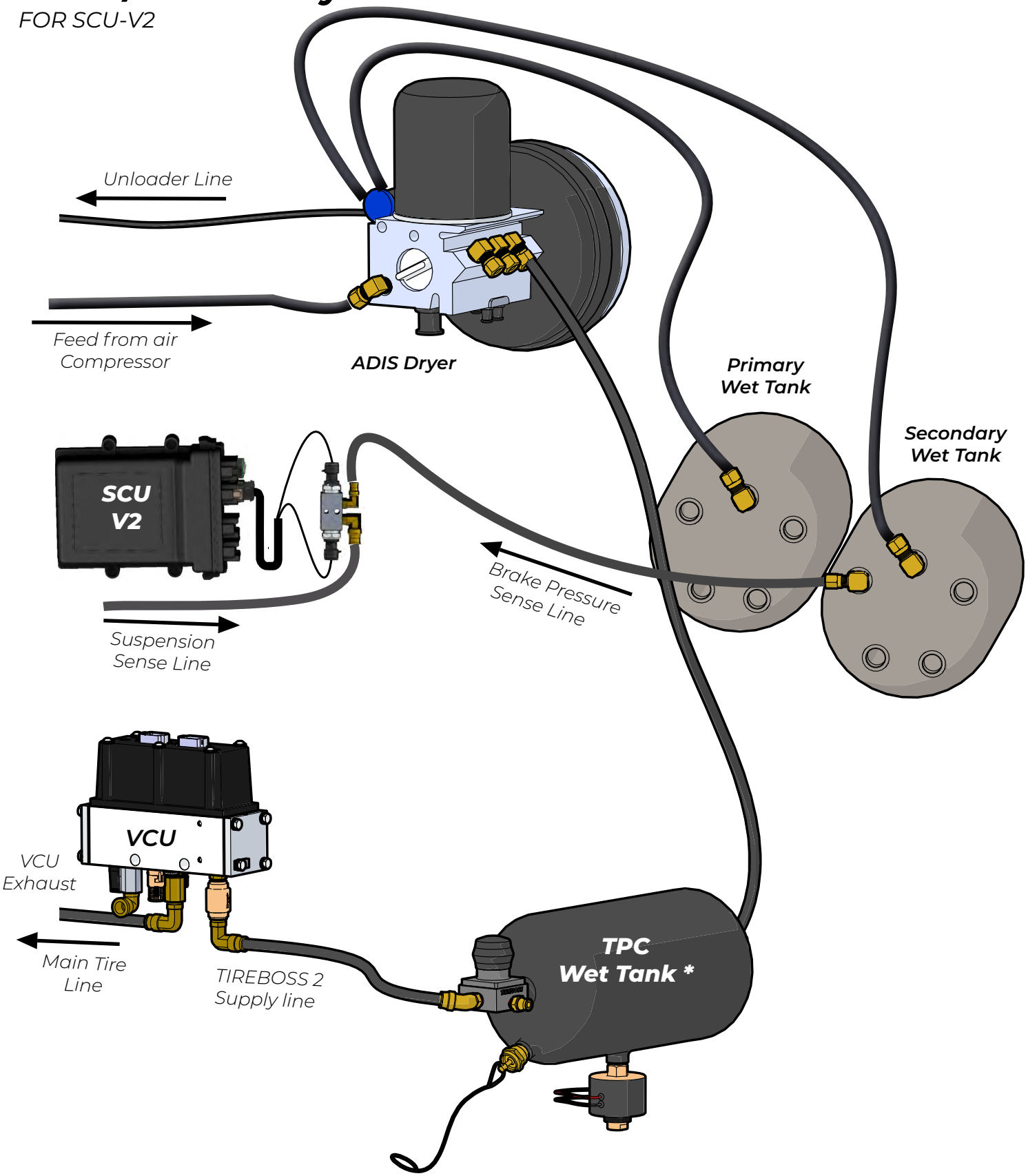

*In ADIS systems, TPC Wet Tanks are an optional component with the PPV being remote mounted

Dual Dryer Pneumatic Schematic

FOR SCU-V1

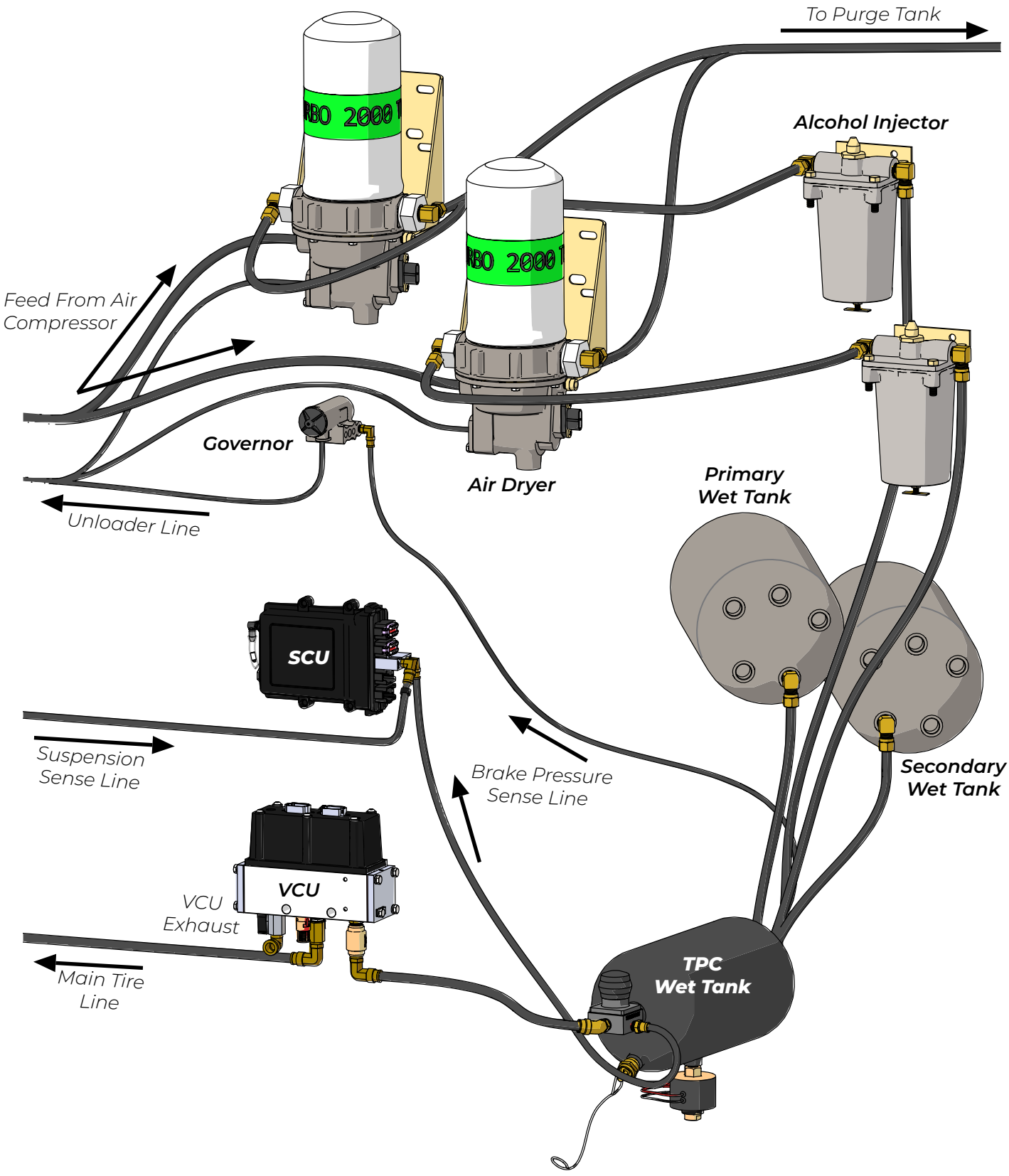

Dual Dryer Pneumatic Schematic

FOR SCU-V2

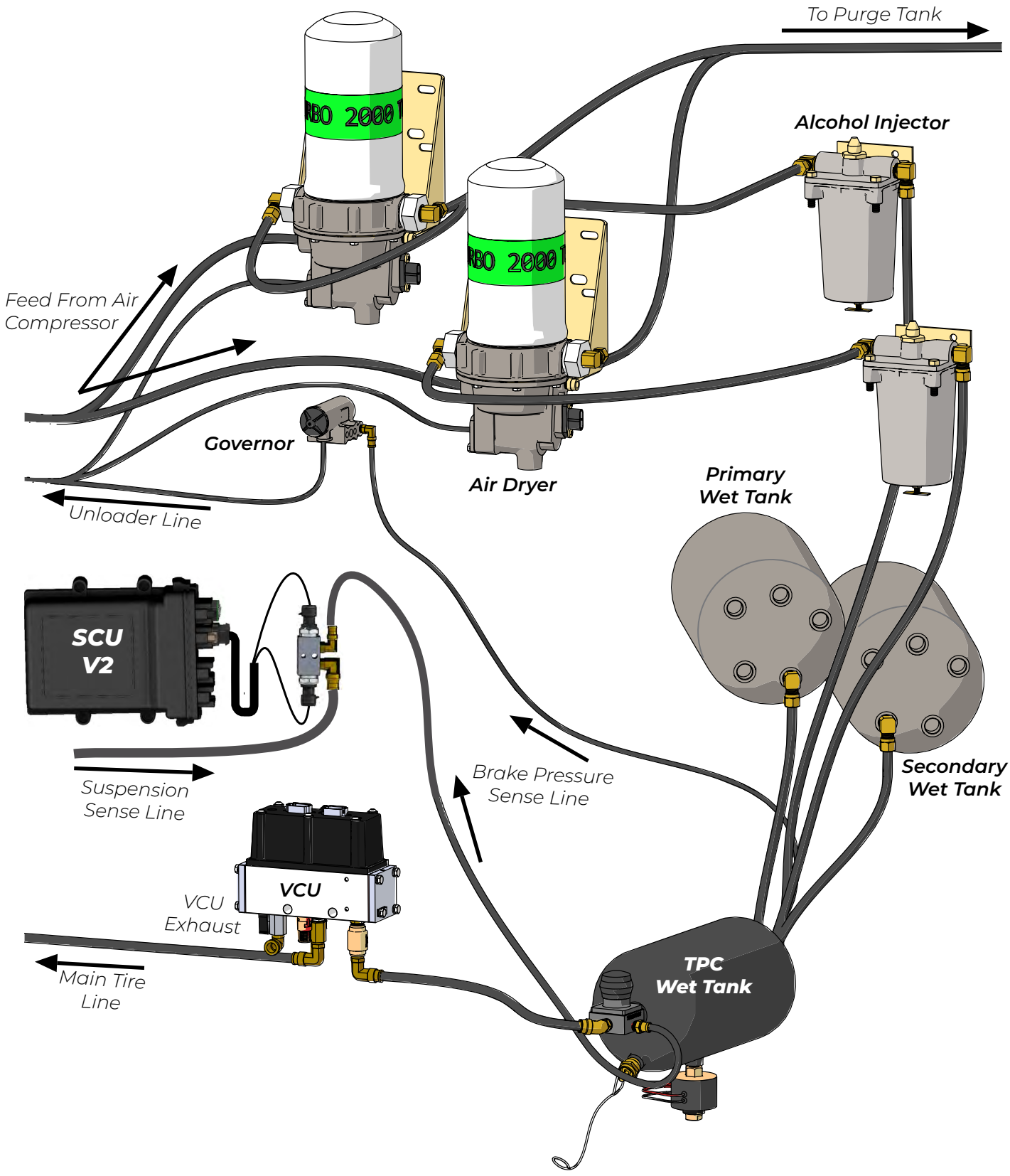

SECTION 2

ADJUSTMENTS, SETTINGS, & MAINTENANCE PROCEDURES

Tireboss 2 Service Inspection - Monthly

Customer Name: _____ Work Order #: _____
TB2 Serial Number: _____ Vehicle Make: _____
Inspected by: _____ Vehicle Mileage: _____
Date: _____ Unit #: _____

Main Lines, Fittings & Attachments

	✓	✘	Comments
Steer Wheel Hardware, Check;			
- Manual wheel valves for condition & operation ...	☐	☐	_____
- Hoses & hardware for condition & operation	☐	☐	_____
- Air flow from each tire to control valve	☐	☐	_____
- Tire pressure loss warning operation	☐	☐	_____
- Air leaks (Use soapy water on all connections).....	☐	☐	_____
Drive Wheel Hardware, Check;			
- Manual wheel valves for condition & operation ...	☐	☐	_____
- Hoses & hardware for condition & operation	☐	☐	_____
- Air flow from each tire to control valve	☐	☐	_____
- Tire pressure loss warning operation	☐	☐	_____
- Air leaks (Use soapy water on all connections).....	☐	☐	_____
Trailer Hardware, Check;			
- Manual wheel valves for condition & operation ...	☐	☐	_____
- Hoses & hardware for condition & operation	☐	☐	_____
- Air flow from each tire to control valve	☐	☐	_____
- Tire pressure loss warning operation	☐	☐	_____
- Air leaks (Use soapy water on all connections).....	☐	☐	_____
- Clean in line Y-Strainer (if equipped)	☐	☐	_____
Verify Max & Min pressures on wheel end plates and VCU. Compare to values given by OCU	☐	☐	_____

Air Supply System

- Check dryers unloading OK (with TPCS off)	☐	☐	_____
- Check Wet-Tank Drain Operation	☐	☐	_____
- Drain Wet-Tank (Comment on moisture)	☐	☐	_____
- Drain Secondary Tanks (Comment on moisture)	☐	☐	_____

Inspected by: _____ Date: _____
Repairs completed by: _____ Date: _____

Tireboss 2 Service Inspection - Annual

Customer Name: _____ Work Order #: _____
TB2 Serial Number: _____ Vehicle Make: _____
Inspected by: _____ Vehicle Mileage: _____
Date: _____ Unit #: _____

System Operations

	✓	✘	Comments
Correct operation of OCU	☐	☐	
Low air supply warning at 75 (+/- 5) brake PSI	☐	☐	
Adjust PPV to specification (min. 95 PSI with open line at bottom of TB2 Valve)			
Check compressor governor (112 PSI Cut in)	☐	☐	
Select Lowest Pressure Setting, Check;	☐	☐	
- Steer tires deflated	☐	☐	
- Drive tires deflated			
- Trailer tires deflated	☐	☐	
Select Highest Pressure Setting, Check;	☐	☐	
- Steer tires inflating	☐	☐	
- Drive tires inflating	☐	☐	
- Trailer tires inflating	☐	☐	
Low air warning off during inflation	☐	☐	

Main Lines, Fittings & Attachments

Check steer wheel hardware;			
- Manual wheel valves condition/ operation	☐	☐	
- Hoses and hardware condition	☐	☐	
- Air flow check valve from each tire to valve	☐	☐	
- Tire pressure loss warning operation	☐	☐	
- Auto wheel end valve (locks air in tires when main line is removed)	☐	☐	
- Air leaks (Use soapy water on all connections)	☐	☐	
Check drive wheel hardware;			
- Manual wheel valves condition/ operation	☐	☐	
- Hoses and hardware condition	☐	☐	
- Air flow check valve from each tire to valve	☐	☐	
- Tire pressure loss warning operation	☐	☐	
- Auto wheel end valve (locks air in tires when main line is removed)	☐	☐	
- Air leaks (Use soapy water on all connections)	☐	☐	

Check trailer wheel hardware;

- *Manual wheel valves condition/ operation* ☐ ☐ _____
- *Hoses and hardware condition* ☐ ☐ _____
- *Air flow check valve from each tire to valve* ☐ ☐ _____
- *Tire pressure loss warning operation* ☐ ☐ _____
- *Air leaks (Use soapy water on all connections)* ☐ ☐ _____

Verify Max & Min pressures on wheel end plates and VCU's. Compare to values given by the OCU ☐ ☐ _____

Air Supply System

Visual check of compressor discharge lines ☐ ☐ _____
Check wet tank drain operation ☐ ☐ _____
Drain Wet tank (Comment on moisture) ☐ ☐ _____
Drain Secondary tank (Comment on moisture) ☐ ☐ _____
Check air dryer(s) & alcohol injector(s);

- *Mounting and hoses* ☐ ☐ _____
- *Service required* ☐ ☐ _____
  - *Change dryer cartridge(s)* ☐ ☐ _____
  - *Change unloader valve (s)* ☐ ☐ _____
  - *Change turbo boost valve(s)* ☐ ☐ _____
  - *Change outlet check valve(s)* ☐ ☐ _____
  - *Drain alcohol injector(s)* ☐ ☐ _____
  - *Refill alcohol injector(s)* ☐ ☐ _____

Control System Service

Check valves & brackets ☐ ☐ _____
Check drive hose hangers & brackets ☐ ☐ _____
Re-torque manifolds on rear wheels ☐ ☐ _____
Re-torque rotary unions ☐ ☐ _____
Check valve heater(s) operations ☐ ☐ _____
Rebuild valves ☐ ☐ _____
Clean in-line Y-strainer (Trailer Only) ☐ ☐ _____

Road Test

Verify system operation ☐ ☐ _____
Check over-speed functions ☐ ☐ _____
Check air brake system & operation ☐ ☐ _____
Steering feel & operation ☐ ☐ _____
Check for reasonable air build up times ☐ ☐ _____

Inspected by: _____ *Date:* _____
Repairs completed by: _____ *Date:* _____

Internal Battery Replacement for OCU

The batteries that are located inside the OCU are required for proper shut down of the system after the vehicle ignition is turned off. These batteries require changing after 3 years from In-Service date. A warning will appear on start-up at the 3-year mark as a reminder to change batteries. If "Remind Me Later" is selected, the warning will stay off for 7 days before appearing again.

NOTE: if someone accidently selects "Changed", the warning will not appear for 3 more years, even though the batteries were not changed.

The following procedure describes how to change the batteries:

1. *Using a T8 Torx bit, remove the 4 screws holding the two OCU case halves together.*

2. *Slowly remove the back of the case being cautious not to damage or remove any wiring on the inside.*





Replace with 3 x Ni-MH AAA Rechargeable Batteries ONLY

3. *The 3 AAA Ni-MH rechargeable batteries are located in the battery holder on top of the board stack. Remove these batteries and replace with exact type of rechargeable batteries.*

4. *Once the batteries are replaced, carefully place the two OCU halves together and insert the screws back into the case. Plug the connectors into the corresponding plugs.*

5. *The next time the warning appears on the OCU, you can select "Changed" and the warning will not appear for 3 more years.*

Adjusting the Pressure Protection Valve [PPV]

CONTAINED WITHIN THIS GUIDE ARE INSTRUCTIONS FOR SETTING THE FAILSAFE VALUES ON THE PRESSURE PROTECTION VALVE.

*FOR TRUCKS **EQUIPPED WITH CONVENTIONAL DRYER SYSTEMS**, FOLLOW THE STEPS BEGINNING ON PAGE 2-5*

*FOR TRUCKS **EQUIPPED WITH AD-IS & AD-HF DRYER SYSTEMS**, FOLLOW THE STEPS BEGINNING ON PAGE 2-6*

Before beginning the service;

- Ensure all manual wheel end valves are closed

- With the truck turned off, depress the brake pedal to ensure that no air is remaining in the wet tank or AD-IS/ AD-HF dryer

Warning;

- Never use thread tape! Use Locktite 5452 pipe sealant on all external threaded fittings.

Required Parts;

- Locktite 5452 Pipe Thread Sealant

Required Tools;

- 3/16” Hex Key

- 1/2” [13mm] Wrench

- 9/16” [14mm] Wrench

- External Pressure Gauge with 1/4” Fitting [Only for AD-IS & AD-HF equipped trucks]

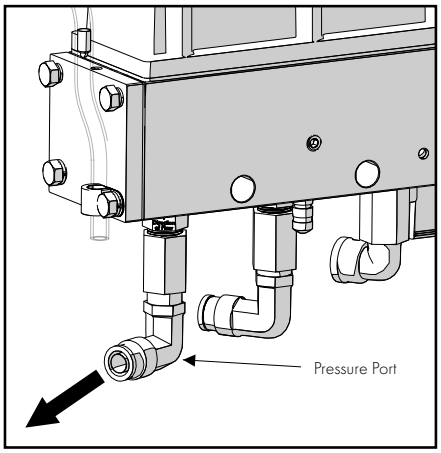



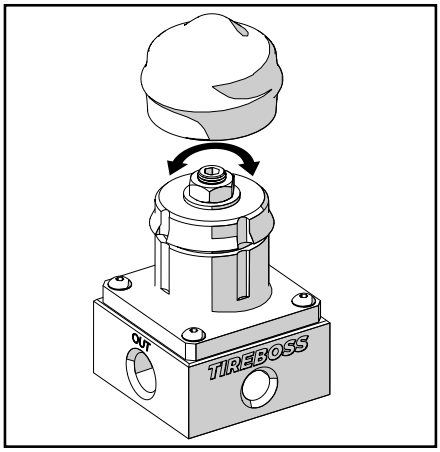

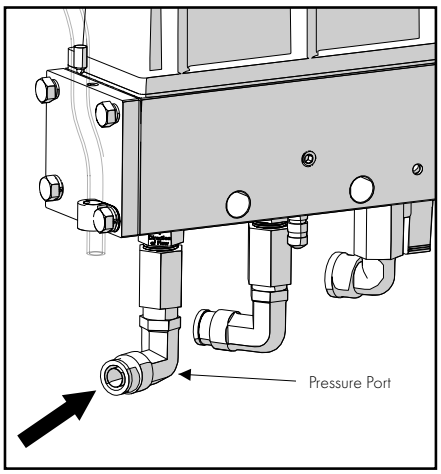

Conventional Dryer Equipped Trucks;

1. *Locate the "Pressure Port" tube on the bottom of the VCU labeled "Press". Using a 1/2" [13mm] box wrench, press on the outer ring of the brass fitting and remove the tube from the valve by pulling directly away from the fitting.*
2. *Start the truck and navigate the to the "Valve Status" screen on the OCU unit inside the truck cab.*
3. *With the engine at idle, air will be flowing out of the open line. If the pressure stabilizes at 95 PSI [+/- 4 PSI], the PPV is set okay. If the reading is not within this range then proceed with step 4.*
4. *Remove the rubber cap covering the top of the PPV valve. Using a 9/16" [14mm] wrench on the locking nut and a 3/16" hex key you can adjust the pressure.*
5. *Pay attention to the "Actual PSI" reading, and adjust the PPV set screw until the reading is steady at 95 PSI [+/- 4 PSI].*

   Note *Turning the PPV set screw clockwise will increase the pressure, while turning the PPV set screw counter-clockwise will decrease pressure.*

   Note *While adjusting the PPV, go slow and allow the tank pressure to stabilize before refining further.*

6. *Once you have established a 95 PSI [+/-4 PSI] PPV setting, tighten the lock nut using a 9/16" [14mm] wrench to ensure the setting doesn't change.*
7. *While sitting in the truck, depress the brake pedal to bring the "Actual PSI" reading down to 80 PSI. With the truck at idle, ensure the system builds pressure and re-stabilizes at 95PSI [+/- 4 PSI].*
8. *Turn off the truck, replace the rubber PPV cover and re-attach the pressure tube to the bottom of the VCU by pushing it back into the fitting. The PPV is now set, ensure to leak test all fittings before operating the truck.*

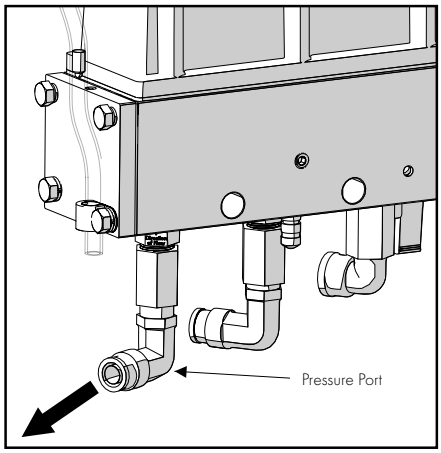

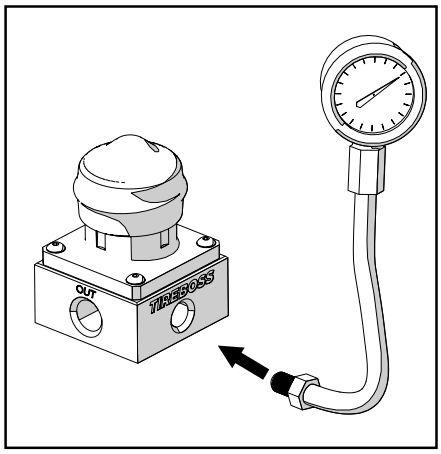

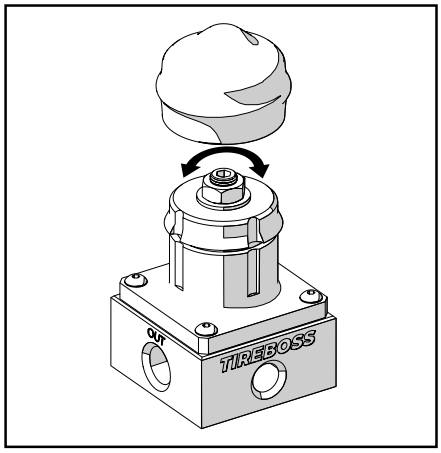

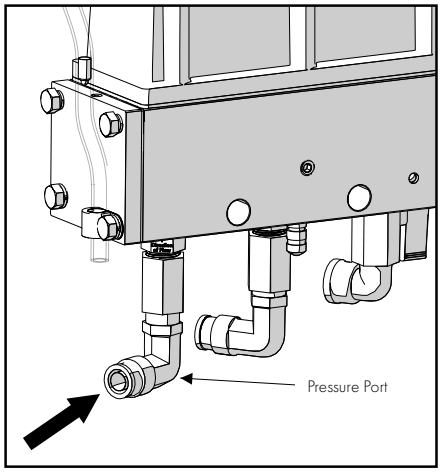

AD-IS & AD-HF Dryer Equipped Trucks;

1. *Locate the "Pressure Port" tube on the bottom of the VCU labeled "Press". Using a 1/2" [13mm] box wrench, press on the outer ring of the brass fitting and remove the tube from the valve by pulling directly away from the fitting.*
2. *Remove the test port plug on the PPV using a 1/4" hex key and thread an external pressure gauge into this 1/4" NPT threaded location.*
3. *Start the truck and let it idle, air will be flowing out of the open line. Monitor the external pressure gauge. If the pressure stabilizes at 95 PSI [+/- 4 PSI], the PPV is set okay. If the reading is not within this range then proceed with step 4.*
4. *Remove the rubber cap covering the top of the PPV valve. Using a 9/16" [14mm] wrench on the locking nut and a 3/16" hex key you can adjust the pressure.*
5. *Pay attention to the external pressure gauge, and adjust the PPV hex head screw until the reading is steady at 95 PSI [+/- 4 PSI].*

   Note *Turning the PPV set screw clockwise will increase the pressure, while turning the PPV counter-clockwise will decrease pressure.*

   Note *While adjusting the valve, go slow and allow the tank pressure to stabilize before refining further.*
6. *Once you have established a 95 PSI [+/-4 PSI] PPV setting, tighten the lock nut using a 9/16" [14mm] wrench to ensure the setting doesn't change.*
7. *While sitting in the truck, depress the brake pedal to bring the reading on the external pressure gauge down to 80 PSI. With the truck at idle, ensure the system builds pressure and re-stabilizes at 95PSI [+/- 4 PSI]*
8. *Remove the external pressure gauge and re-install the test port plug into the PPV using a 1/4" hex key. Apply Locktite 5452 pipe thread sealant before installing.*
9. *Turn off the truck, replace the rubber PPV cover and re-attach the pressure tube to the bottom of the VCU by pushing it back into the fitting. The PPV is now set, ensure to leak test all fittings before operating the truck.*

Adjusting the Air Compressor Governor

CONTAINED WITHIN THIS GUIDE ARE INSTRUCTIONS FOR SETTING THE ON-BOARD AIR COMPRESSOR GOVERNOR

*FOR TRUCKS **EQUIPPED WITH A SINGLE D2 GOVERNOR**,*
FOLLOW THE STEPS BEGINNING ON PAGE 2-8

*FOR TRUCKS **EQUIPPED WITH A DUAL D2 GOVERNOR**,*
FOLLOW THE STEPS BEGINNING ON PAGE 2-9

*FOR TRUCKS **EQUIPPED WITH A NON-ADJUSTABLE GOVERNORS**,*
FOLLOW THE STEPS BEGINNING ON PAGE 2-10

Before beginning the installation;

- ***Ensure all manual wheel end valves are closed***
- ***With the truck turned off, depress the brake pedal to ensure that there is no air remaining in the wet tank or AD-IS/ AD-HF dryer***

Warning;

- ***Never use thread tape! Use Locktite 5452 pipe sealant on all externally threaded fittings.***

Required Parts;

- *Bendix D2 Governor*
- *Locktite 5452 Pipe Thread Sealant*

Required Tools;

- *Flat blade screwdriver*
- *7/16” [12mm] Wrench*
- *External Pressure Gauge with 1/4” Fitting [Only AD-IS & AD-HF equipped trucks]*

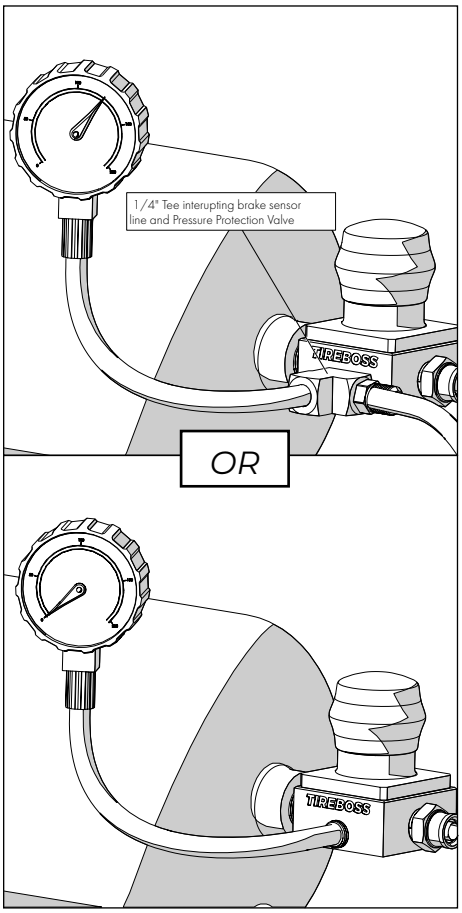

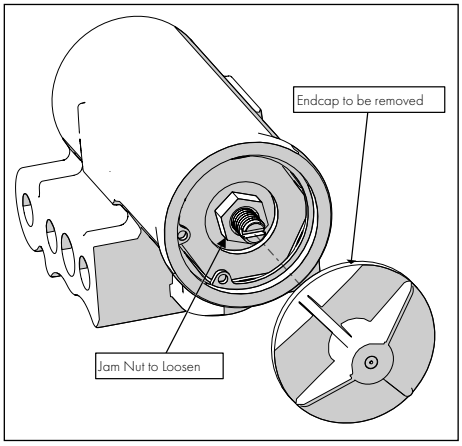

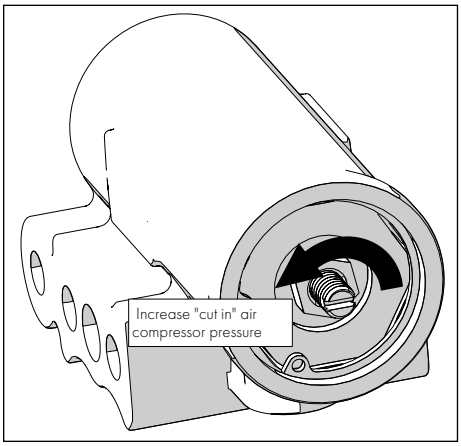

For Trucks with a Single D2 Governor;

Note *Some trucks are equipped with governors that are non-adjustable and must be replaced with an adjustable governor when installing a TB2 control system.*

1. *Install a 0-200 PSI pressure gauge onto the side of the Pressure Protection Valve to monitor the accuracy of the air compressor "cut in & out" values during the adjustment.*

   Note *If the TB2 system is sensing brake pressure from the PPV, tee the gauge into the 1/4" sense line leading to the 1/4" NPT sensing port on the side of the Pressure Protection Valve [PPV].*

   Note *If the TB2 system is sensing brake pressure from elsewhere on the truck, remove the 1/4" pipe plug from the PPV using a 1/4" allen key and install the gauge in this location.*

2. *With the TB2 system powered off. Ensure the trucks air compressors "cut out" is set to between 132 - 134 PSI.*

3. *It is important to ensure that the compressors "cut in" pressure is set to above 112 PSI.*

   Note *If the "cut in" pressure is **ABOVE 112 PSI** then the air compressor is adjusted correctly and no further adjustments are required.*

   Note *If the "cut in" pressure is **BELOW 112 PSI** then follow the steps below to adjust the air compressor governor. The TB2 systems OCU MUST be turned off while performing the adjustment.*

   a. *Locate the D2 air compressor governor on the truck*

   b. *Remove the end cap protecting the adjustment screw*

   c. *While holding the set screw in place with a flat headed screwdriver, loosen the jam nut using a 7/16" [12mm] wrench.*

   d. *Using the same flat-headed screwdriver, turn the set screw counter clockwise to increase the air compressors "cut in" pressure.*

   Note *Only turn the set screw a 1/4 turn at a time and keep track of how many turns are required.*

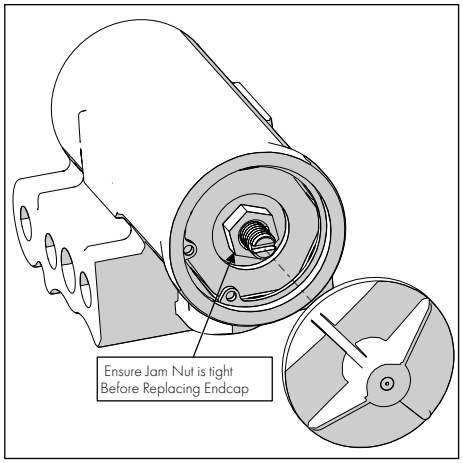

e. *Tighten the jam nut with a 7/16" [12mm] wrench once satisfied.*

f. *Apply the trucks brakes to bleed the system down slowly until the air compressors "cut in" engages. Record the "cut in" pressure when the air compressor engages.*

g. *If the "cut in" is still below 112 PSI, then repeat steps "c - g" until the "cut in" is above 112 PSI.*

h. *Once satisfied with the "cut in" pressure, ensure the jam nut is tight before replacing the end cap.*

For Trucks with Dual D2 Governors;

Note *Some trucks are equipped with governors that are non-adjustable and must be replaced with an adjustable governor when installing a TB2 control system.*

1. *Install a 0-200 PSI pressure gauge between the D2 compressor governor and the receiver tank sense line.*
2. *Install an additional 0-200 PSI pressure gauge into the system to monitor the accuracy of the air compressor "cut in & out" values during the adjustment.*

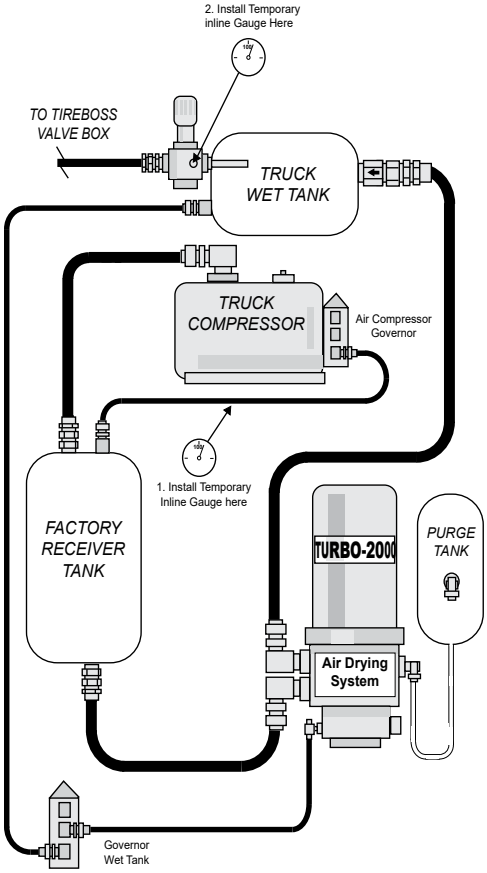

Note *If the 1/4" sensing port on the side of the PPV is empty, then remove the 1/4" pipe plug using a 1/4" allen key and install the gauge in this location.*

Note *If the 1/4" sensing port on the side of the PPV is occupied by a sensing line, then tee the gauge into this sensing line.*

3. *With the TB2 system powered off. Ensure that the air compressor "cut out" is set to 135 PSI after the dryer is unloaded and the pressures have stabilized. If it does not stabilize at 135 PSI then follow the steps below.*

a. *Locate the air compressors governor.*

b. *Remove the end cap protecting the adjustment screw.*

c. *While holding the set screw in place with a flat headed screwdriver, loosen the jam nut using a 7/16" [12mm] wrench.*

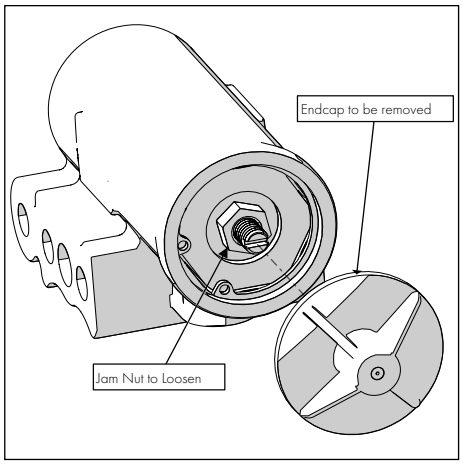

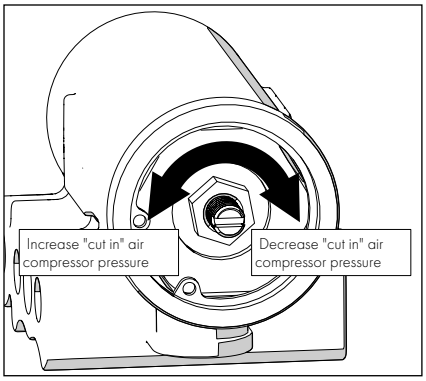

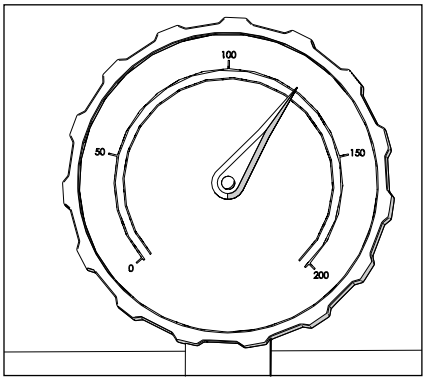

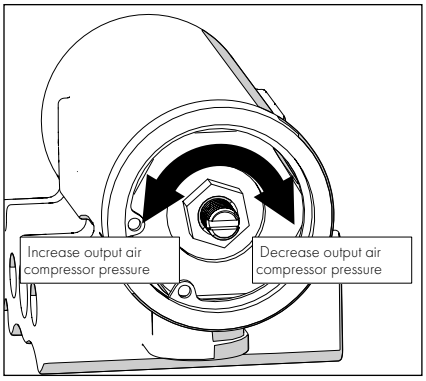

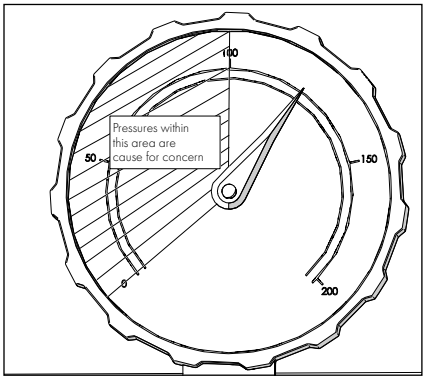

d. *Using the same flat-headed screwdriver, turn the set screw [**COUNTER-CLOCKWISE** to **INCREASE** the output air pressure, **CLOCKWISE** to **DECREASE** the output pressure].*

   Note *Only turn the set screw a 1/4 turn at a time and keep track of how many turns are required.*

e. *Tighten the jam nut with a 7/16" [12mm] wrench once satisfied.*

f. *Continue steps "c - e" until pressures stabilize at 135 PSI. When stabilized pressures are achieved, replace the end cap and continue with step 4.*

4. *Ensure that the wet tank pressures stabilize at 125 PSI. If the pressures are not at these settings, follow the procedure below to adjust the wet tank governor;*

   a. *Remove the end cap protecting the adjustment screw.*

   b. *While holding the set screw in place with a flat headed screwdriver, loosen the jam nut using a 7/16" [12mm] wrench.*

   c. *Using the same flat-headed screwdriver, turn the set screw [**COUNTER-CLOCKWISE** to **INCREASE** the output air pressure, **CLOCKWISE** to **DECREASE** the output pressure], a 1/4 turn at the time, towards a stabilized pressure of 125 PSI.*

   d. *Tighten the jam nut with a 7/16" [12mm] wrench once satisfied.*

   e. *Continue steps "b - d" until the wet tank governor stabilizes at a pressure of 125 PSI. When pressures are stabilized, replace the governor end cap and continue with step 5.*

5. *Ensure that the governors are adjusted and operating correctly by pumping the brakes. After pumping the brakes (for a minimum of 30 sec.), confirm that the air pressure drops no more than 20PSI and that the air compressor kicks on to restore to the set pressures of 135 PSI after the air dryer unloads at 125 PSI in the wet tank.*

For Trucks with Non-Adjustable air governors;

Trucks equipped with integral, non-adjustable air governers do not allow for tuning for the TB2 system. In these situations the PPV must be set to 95 PSI to ensure there is no damage to the rest of the system. The procedure for adjusting the PPV can be found under the "Adjusting the PPV" on page 2-4.

Rotary Union Maintenance

The following procedure dictates the steps that must be followed for inspecting, lubricating, and replacing rotary unions. Proper care of rotary unions is critical to system operation.

Before beginning the service;

- **Ensure that the truck is parked on a flat surface with the parking brake on before beginning service**

- **Ensure that all Wheel End Valves are OPEN while testing and CLOSED while servicing**

Warning;

- **Working with compressed air can cause severve injuries, ensure that safety glasses are worn at all tiems thoughout the service.**

- **TPC only recommends using "NEMCO Red Max EP1.5" grease, however in emergency situations when this is not available, a tacky and water resistant grease with a high dropping point [> 260°C] will suffice.**

Required Parts;

- *New Rotary Union [Refer to Parts Manual for TPC Part #]*
- *Nemco Red Max EP1.5 Tacky Grease*
- *Loctite 5452*
- *Brake Cleaner*

Required Tools;

- *15/16" Crowsfoot [3/8" drive]*
- *7/8" [23mm] Wrench*
- *6" Extension [3/8" drive]*
- *15/16" [24mm] Wrench*
- *Small Flat Screwdriver*
- *Hand Operated Grease Gun*
- *ft.lbs. Torque Wrench [3/8" drive]*

Rotary unions should be checked weekly for excessive wear to ensure proper operation of the system. A faulty/ damaged rotary union will introduce a leak into the system that will result in the deflation of an entire tire group when the system is left unpowered [i.e. when the trucked is parked and turned off].

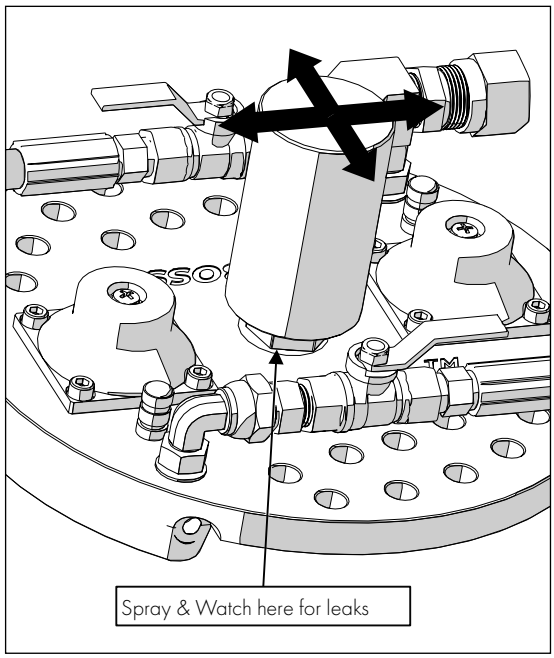

Testing Rotary Unions - Weekly;

1. *Ensure that the truck is parked on a level surface with the parking break engaged prior to beginning the service.*
2. *With the manual wheel end valves OPEN, spray a light coat of soapy water on the rotary union bearing, and where the copper washer mates with the WEV plate.*
3. *Grab the union and wiggle it up, down, right and left and observe for any bubbles forming at the bearing and mating surface location indicating leaks.*

***Note** Some movement in the rotary union is normal, however movement allowing air to escape is excessive and requires replacement.*

Greasing Rotary Unions;

When operating on roads that are frequently salted, sanded or have calcium applied to them.	*Grease every 2,500 km [1,500 miles]*
When operating on clean and clear roads	*Grease every 5,000 km [3,000 miles]*

***Note** Short rotary unions utilize a sealed bearing and do not require greasing.*

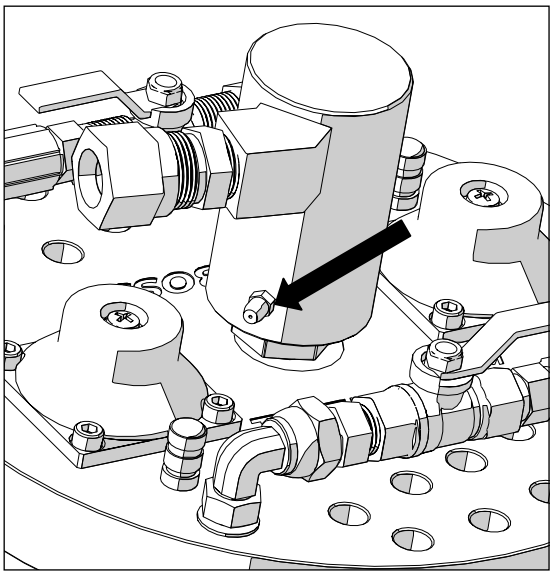

1. *Locate the grease nipple on the side of the rotary union body.*
2. *Apply a sparing amount [maximum one pump] of grease through the nipple to replace the grease that has been dissipated through use.*

***Note** DO NOT use power greasers, they will damage the rotary union's seals. Over greasing [I.e. 2+ pumps of grease] will also damage the rotary union seals.*

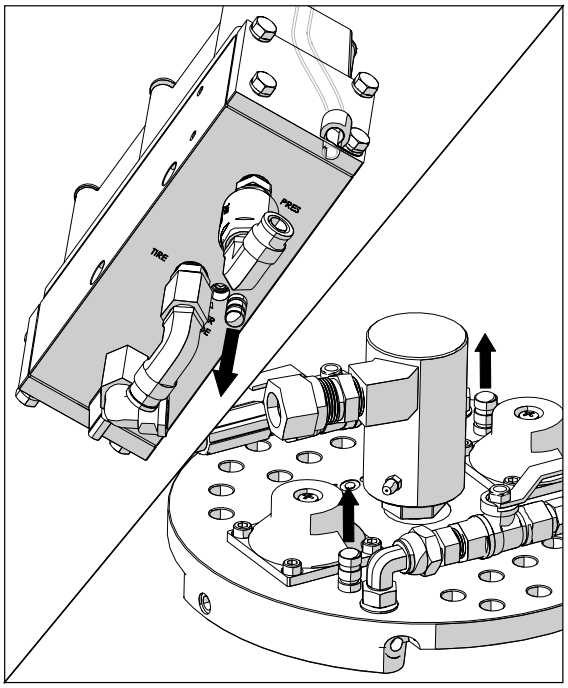

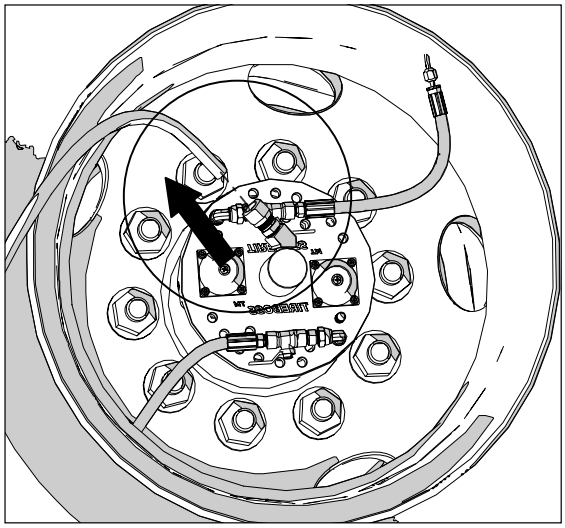

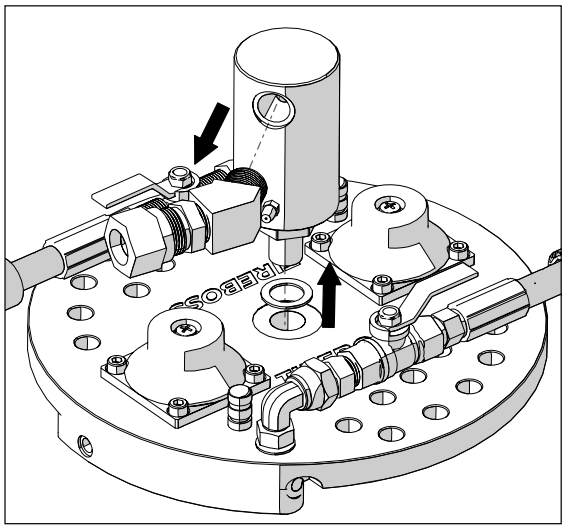

Replacing Rotary Unions;

1. *Ensure that all manual wheel end valves are closed prior to beginning rotary union replacement.*
2. *Remove the dust caps from the schrader valves located on the wheel end valve plate and using a small flat screwdriver press on the center stem of the schrader valve to release all compressed air within the plate.*
3. *Locate the schrader valve on the bottom of the VCU responsible for controlling the tire zone the service is occurring on. Remove the dust cap, and using a small flat screwdriver press on the center stem of the schrader valve to release the compressed air built up in the lines.*
4. *Remove the feed line from the fittings on the rotary union.*

   ***Note** for plastic lines [I.e. the orange lines, pictured left], undo the compression fitting using a 15/16" [24mm] wrench. For heavy duty lines with steel fittings [I.e. black hoses, not pictured], undo the JIC hose end using an 11/16" [18mm] wrench.*

5. *Remove the remaining fittings attached to the old union using a 7/8" [23mm] wrench. Apply Loctite 5452 onto the threads and re-install them back into the new rotary union. Tighten until these fittings are oriented in the same position.*
6. *Using the bent 15/16" TPC wrench [TPC Part # 392-7606], or a 15/16" crowfoot with 6" extension and ratchet, remove the old rotary union and copper washer.*

   ***Note** In some cases it may be necessary to remove the wheel end hoses to allow clearance for the wrench.*

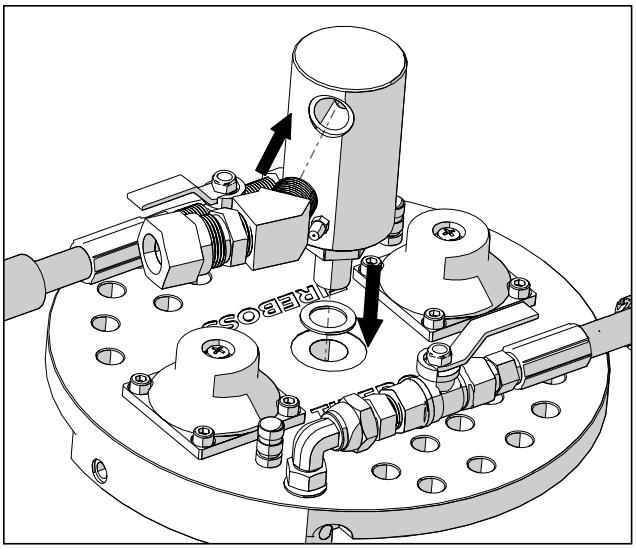

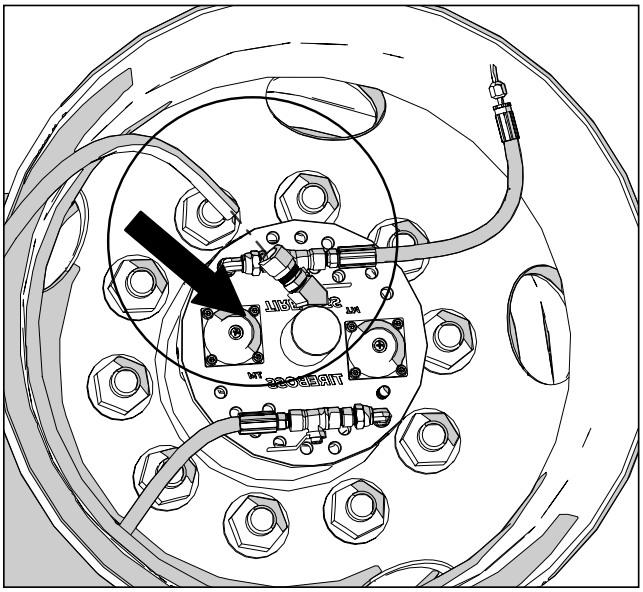

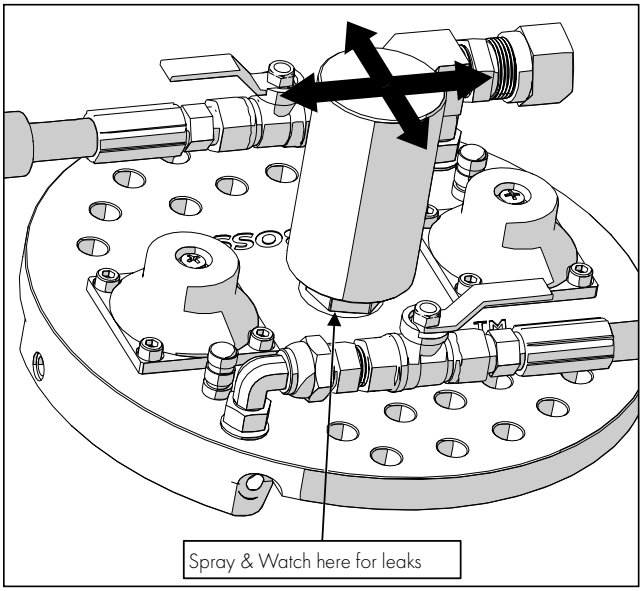

7. *Inspect the hole the rotary union came from and remove any foreign debris and clean before continuing.*

8. *Install the new copper washer [TPC Part #1105-070] onto the new rotary union before installing it into the wheel end valve plate.*

9. *Tighten using a 15/16" crowfoot and torque wrench to torque the new rotary union to 50 ft.lbs [Or until tight when using the bent 15/16" TPC wrench].*

10. *Attach the rotary union feed lines coming from the VCU onto the new rotary union.*

    ***Note** for plastic lines [I.e. the orange lines, pictured left], tighten the compression fitting using a 15/16" [24mm] wrench until tight. For heavy duty lines with steel fittings [I.e. black hoses , not pictured], tighten the JIC hose end using a 11/16 [18mm] wrench.*

11. *Open the manual wheel end valves and spray a light coat of soapy water at on all connections around the rotary union.*

12. *Grab the union and wiggle it up, down, right and left and observe for any bubbles forming at the wheel end plate mating surface or any fittings indicating leaks.*

13. *If leaks are found, tighten rotary union or fittings and ensure an airtight seal before continuing. If no leaks are found then turn on the system, pressurize to the maximum setting and repeat the leak test procedure.*

Wheel End Valve [WEV] Service Procedure

The wheel end plates are exposed to the environment and require yearly servicing to ensure correct operation. The following procedure outlines the process of this service.

Before beginning the service;

- **Ensure the truck is parked on a flat surface with the parking break on before beginning service**
- **Ensure the Valve Control Unit (VCU) is relieved of air pressure using the schrader valve located on the bottom of the valve.)**

Warning;

- **Working with compressed air can cause severe injuries, ensure that safety glasses are worn at all times during the service.**

Required Parts;

- *WEV Service Kit (TB2-WEB-SERV-KT): 1 kit for each tire*
- *Brake Cleaner*

Required Tools;

- *Soap & Water spray mixture*
- *Small Flat Screwdriver*
- *No.2 Phillips Screwdriver*
- *3/8" [10mm] Wrench*
- *5/32" Allen Key.*
- *in.oz Torque Wrench*

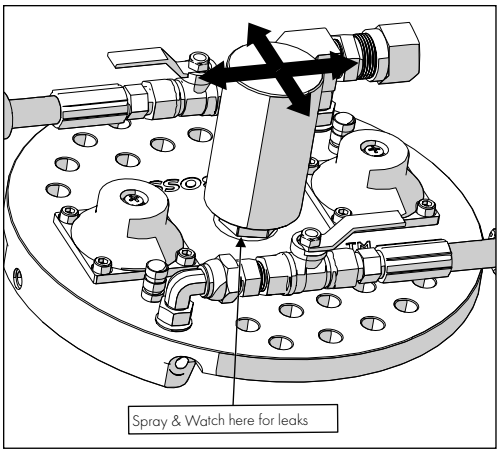

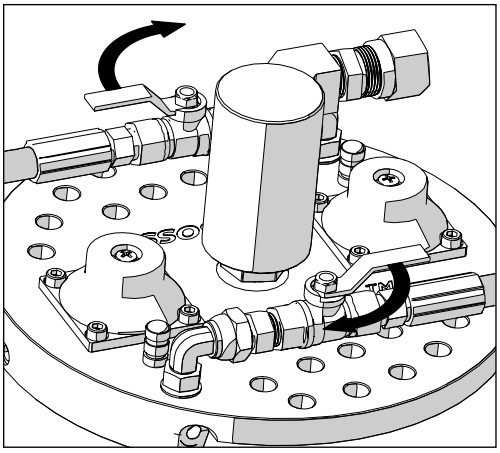

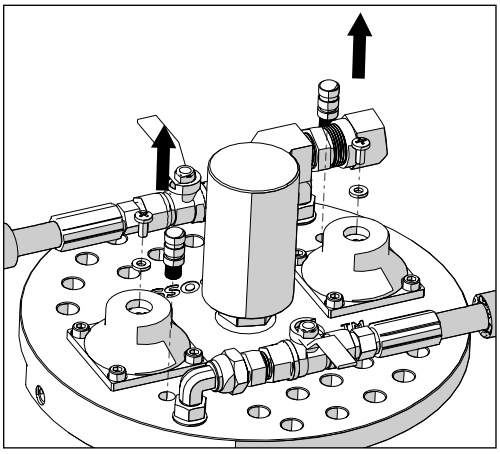

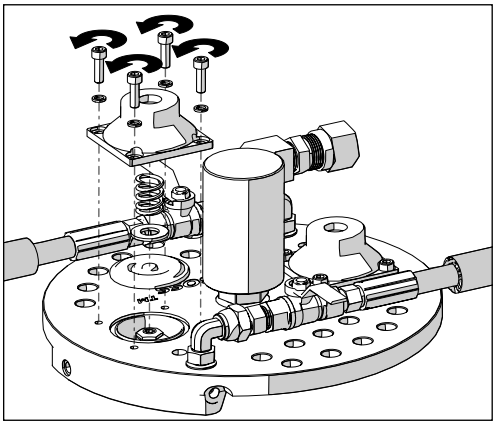

1. *Ensure that the truck is parked on a level surface with the parking break engaged prior to beginning the service.*

2. *Begin by checking the rotary unions for excessive wear or leaks. Spray a light coat of soapy water over the entire WEV plate.*

3. *Grab the union and move it up, down, right and left. Observe for any bubbles forming in the bearing area or at the copper washer mating surface indicating leaks.*

   NOTE *It is normal for there to be some movement in the rotary union, however movement allowing air to escape is excessive and requires both a new union and copper washer. Refer to the TIREBOSS "Rotary Union Maintenance" for repair procedures.*

4. *Close the manual wheel end valves on all tire groups and remove the schrader valve dust caps [1 for a single wheel plate, 2 for a dual wheel plate]. Using a small screwdriver or similar tool, press the center of the schrader valve [s]to ensure there is no air pressure remaining in the system.*

   NOTE *Working with compressed air can cause severe injuries, ensure that safety glasses are worn at all times during the service.*

5. *Remove the screw on the top of the valve caps and the porous washers underneath using a No.2 phillps screwdriver. This will release any remaining air pressure. Ensure the vent is clean and clear of dirt.*

7. *In a cross pattern, remove the wheel end valve caps using a 5/32" allen key.*

   NOTE *there is a strong spring pushing up against the cap, take care to remove the cap slowly and evenly to prevent injury or damage.*

8. *After removing the cap and spring, remove the metal washer, followed by the rubber diaphragm.*

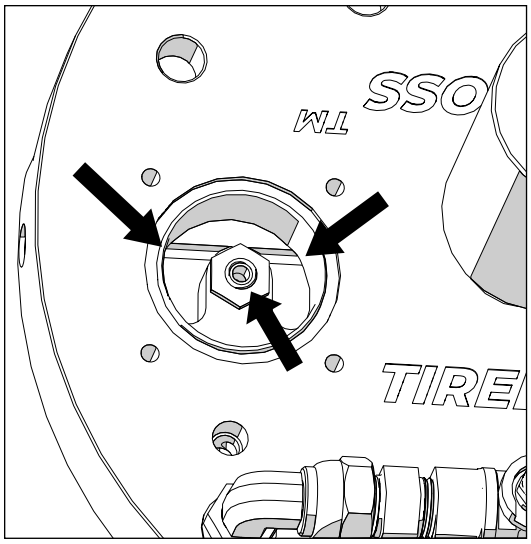



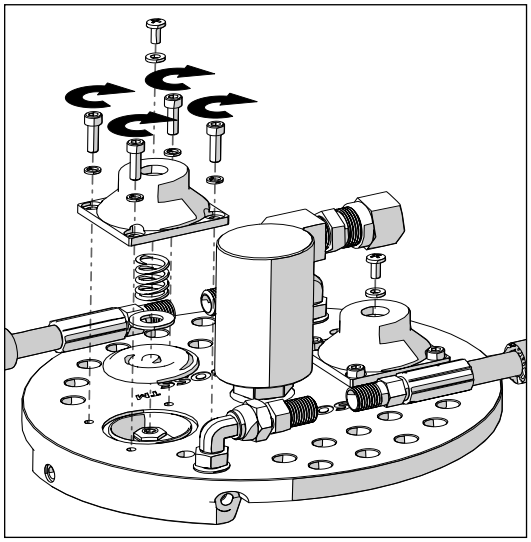

9. *Check the diaphragm for cracks, rips, or tears. Replace if any are found [TPC Part# WEV-1000-02].*
10. *Check all passages in the plate for dirt or debris. Use brake cleaner and compressed air to clean the passages. Ensure all passages are clear by quickly opening each wheel end valve one at a time and confirming the free flow of air before continuing.*

    NOTE *there is a small hole in the center of the orifice screwed into the plate that MUST be clean to ensure accurate readings of the tire pressure.*

11. *Re-install the diaphragm. Be sure that the outer edge is seated correctly into the groove of the plate. If it is not seated correctly the diaphragm could pinch causing both damage and leaks.*
12. *Re-Install the metal washer on top of the diaphragm and set the spring onto it*
13. *Set the wheel end valve cap onto the spring.*
14. *Apply a small amount of anti-seize onto the socket cap screws before inserting them through the cap and into the WEV plate.*
15. *Slowly and evenly tighten the socket cap screws to seat the cap. Use caution when tightening the cap as to not pinch the diaphragm. Using the No.2 phillips screwdriver, re-install the porous washer and screw.*
16. *Torque bolts to 50 in.oz.*
17. *Repeat steps 1-16 for all other tires*
18. *Open the wheel end valves and leak check with a soap and water mixture.*
19. *Turn on the TIREBOSS 2 system and set it to its highest setting before leak testing again.*

TIREBOSS® 2
Tire Pressure Control

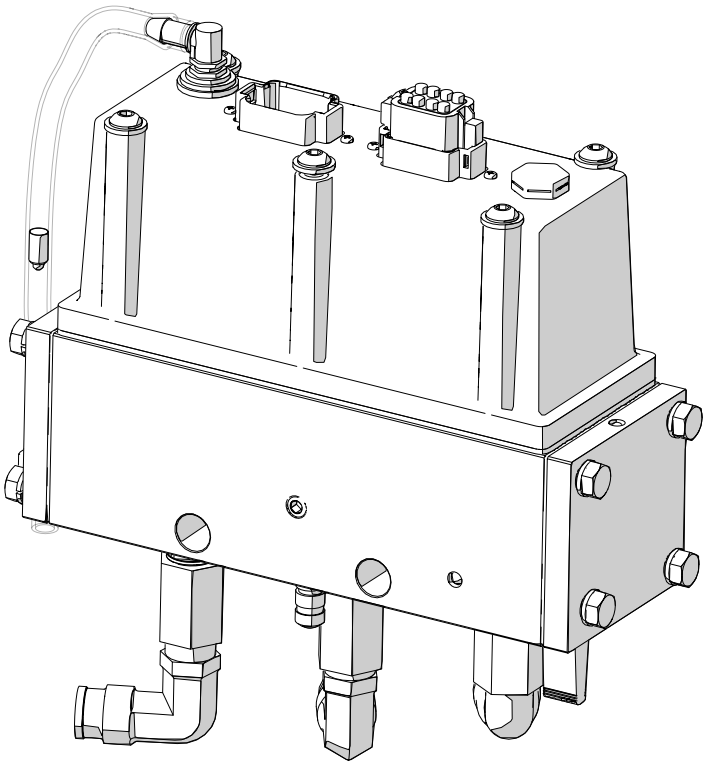

TB2 Valve Service Procedure

Version 2.0 | Current as of August 26, 2024

Before you begin:

Read, Understand and Comply with;

- All Instructions and procedures,
- Companies maintenance intervals, service routines, installation and diagnostic procedures
- Vehicle manufacturers safety instructions when working on vehicles,
- Vehicle manufacturers safety and best practice guidelines not included or described in service procedure,
- Local safety regulations

During Service:

- Work should only be carried out by trained personnel
- Use only recommended parts, tools, and procedures

Upon Completing Service:

- All vehicles should be thoroughly tested and inspected before being released back into service
- Ensure the date and service type is noted on the log sheet located inside of the SCU cover

Safety Notice:

Proper maintenance, service and repair is important for the reliable and safe operation of Tire Pressure Control International Ltd.'s [henceforth known as "*TPC International*"] ***TIREBOSS® 2 Tire Pressure Control*** system. Systems that lack or have poor service and maintenance intervals have a higher potential for failure with potentially devastating circumstances. Failure of the control system could place additional stress on different systems within the vehicle causing them to be worn in ways they were not designed for and creating a dangerous situation. This includes, but is not limited to, vehicle tires, suspension system, pneumatic system, electrical system, etc. The procedures outlined in this guide are preventive and should be considered as part of regular maintenance in order to ensure the health and good operation of the system. Due to the technical nature of the procedure outlined

Disclaimer:

The description and specifications outlined in this service procedure are current as of the date indicated on the front cover. ***TPC International*** reserves the right to modify, revise, or discontinue components that may be used throughout the procedure without notice to customers. This right will be reserved for instances where the technical development team at ***TPC International*** devises a solution it deems to be more appropriate. Contact ***TPC International*** if you believe a change has been made to your system (since the date of this procedure). Any reference to brand names seen in this publication are made as an example of the recommended products used and should not be considered as an endorsement. Alternative's to these products can be used as long they are verified to be of a) a similar chemical composition, b) will not damage existing hardware, and c) will serve the same purpose as the recommended product. Only genuine ***TIREBOSS® 2*** replacement parts can be used in order to maintain warranty. Failure to use genuine ***TIREBOSS® 2*** replacement parts can also have adverse effects and create critical issues within the system. Every effort has been made to ensure the accuracy of the following procedure, however ***TPC International*** makes no expressed or implied warranty claims based on the enclosed information. ***TPC International*** will also not be liable for any incidental or indirect damages or consequential damages incurred by following this procedure.

Contact TPC International:

Email: info@tireboss.com

Phone Number: +1 (780) 451-4894

Toll Free:

1 (888) 338 3587 [North America]

1 (800) 148 694 [Australia]

0 (800) 443 971 [New Zealand]

0 (8000) 155 612 [United Kingdom]

Before beginning the service;

- Ensure all manual wheel end valves are closed

- Ensure the Valve Control Unit (VCU) is relieved of air pressure (using the schrader valve located on the bottom of the valve.)

Warning;

- Never use thread tape! Use Locktite 5452 pipe sealant on all external threaded fittings

- Use Lubriplate 105 white assembly grease for lubrication of O-ring seals

- DO NOT lubricate the poppet rubber, this part MUST remain dry

- If your system has more than one Valve Control Unit (VCU), pay attention to the arrangement of the valves, as they are NOT interchangeable and must be installed in the same arrangement.

Required Parts;

- ***TIREBOSS®*** *Valve Maintenance Kit [TB2-VPO-TB]*
- *Loctite 5452 Pipe Thread Sealant*

Required Tools;

- ***TIREBOSS®*** *Cartridge Removal Tool [1000-350]*
- *3/16” Hex Key*
- *5/32” Hex Key*
- *in.lbs Torque Wrench*
- *No. 2 Phillips Screw Driver*
- *7/32” [5.5mm] Wrench or Socket*
- *1/4” [6mm] Wrench*
- *5/16 ” [8mm] Wrench*
- *3/4” [19mm] Wrench*
- *13/16” [21mm] Wrench*

CONTAINED WITHIN THIS GUIDE ARE INSTRUCTIONS FOR BOTH PRIMARY AND SECONDARY VALVE SERVICES.

PRIMARY SERVICE IS THE MOST COMMON ONE DONE ANNUALLY, AND SERVICES THE VALVE CARTRIDGES AND FITTINGS ON THE BOTTOM OF THE VALVE.

THE SECONDARY SERVICE INCLUDES THE PRIMARY SERVICE AS WELL AS THE SOLENOIDS AND SEALS UNDER THE VCU VALVE COVER.

PRIMARY VALVE SERVICE

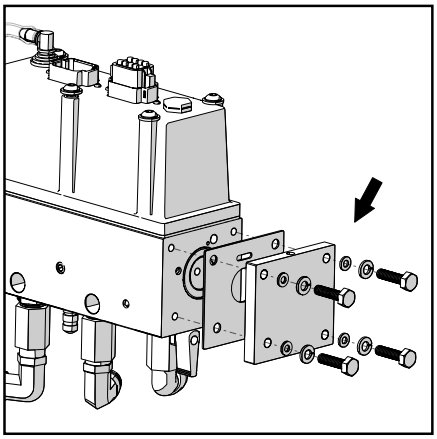

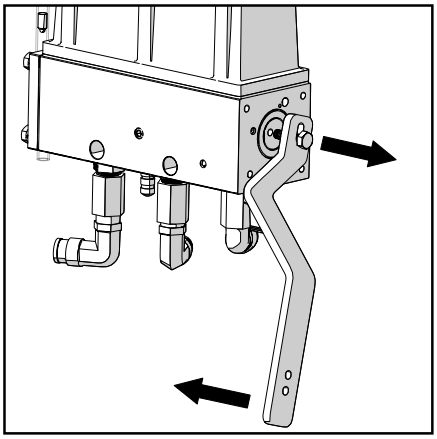

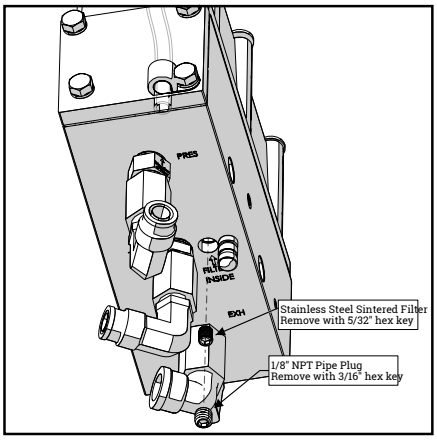

1. *Remove the four 1/4" bolts and accompanying washers holding both end caps in place.*

2. *Remove the end caps and gaskets from the valve body. Inspect for dirt, debris, moisture and tears in the gasket. New gaskets will be installed upon re-assembly.*

3. *Using the **TIREBOSS®** cartridge removal tool [Part # 1000-350], thread a 1/4" bolt through the tool [as seen left] into the threaded holes at the back of the cartridge. Apply pressure to the tools handle to pull out the cartridge. Pull both cartridges and inspect for dirt, debris, moisture, rips in the O-Rings, swollen or cracked poppet rubbers. All O-rings and poppets will be replaced upon re-assembly.*

4. *Inspect the inside of the cartridge bores and pilot holes for dirt, debris, moisture, or obstructions. Ensure that the bores are smooth with no ridges in locations where the O-rings sit.*

5. *Remove the 1/8" NPT pipe plug from the port labelled "Filter Inside" using a 3/16" hex key. The port is located on the bottom of the VCU's aluminum valve body.*

   ***Note** It may be necessary to clean the 1/8" NPT threads in order to actually remove the filter.*
   ***Note** On later designs this port is located under the 1/4" NPT Schrader fitting.*

6. *Further Inside the same hole, remove the 1/16" NPT stainless steel sintered filter using a 5/32" hex key. Inspect the filter for dirt, debris, and moisture. Filter will be replaced upon re-assembly.*

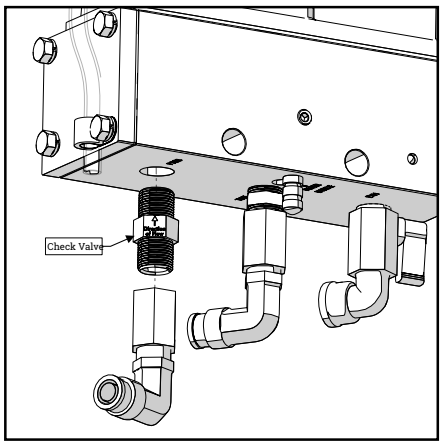

7. *Remove the check valve and connecting fittings from the pressure port of the valve. The port is labelled "Press" on the block. Use a 3/4" [19mm] wrench on the check valve to remove the entire fitting tree. While holding the check valve with the 3/4" [19mm] wrench, use 13/16" [21mm] wrench to remove the coupler and elbow. Inspect the check valve for dirt, debris, or moisture. Check valve will be replaced upon re-assembly.*

   Note *Pay attention to the arrow on the check valve that indicates direction of flow.*

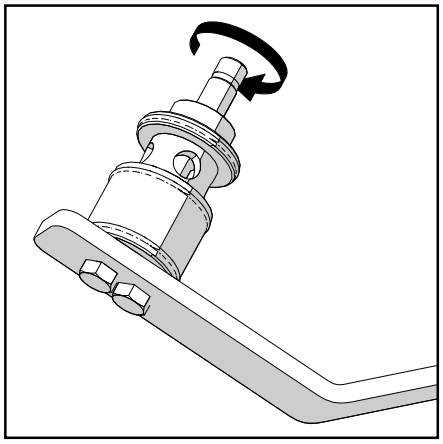

8. *Take two of the 1/4" bolts removed in step 1 [when removing the end caps] and thread them into the back of the cartridge, through the two holes in the cartridge removal tool. This prevents the cartridges internals from spinning and will allow you to loosen the poppet retainer screw using a 5/32" hex key.*

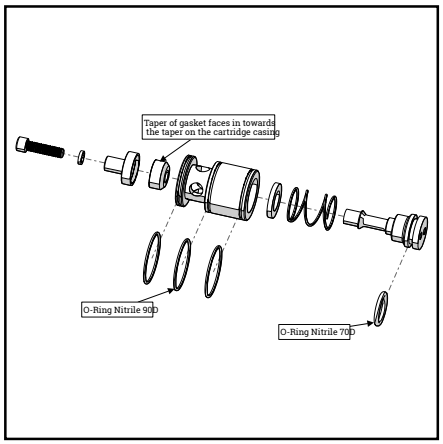

9. *Disassemble the cartridge and lay it out for inspection. Inspect poppet rubber for swelling and cracks. O-Rings for cracks, or tears, and all components for dirt, debris, or moisture. All O-rings and poppets will be replaced upon re-assembly.*

   Note *Take notice of orientation of the poppets rubber, and the location of the two different sizes of O-Rings. This will be important during re-assembly.*

10. *Place a small amount of Lubriplate 105 grease onto the cartridge's inner and outer O-rings prior to installation.*

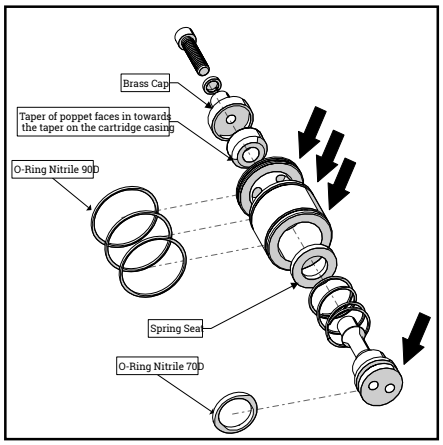

11. *Apply a thin layer of Lubriplate 105 grease to the inner wall of the cartridge, set spring in place and prepare poppet for installation. Ensure the spring seat is placed in prior to spring installation.* ***DO NOT LUBE POPPET RUBBER***

12. *Install the DRY poppet rubber, and brass retainer on the cartridge and finger tighten the retainer screw to hold the assembly in alignment.*

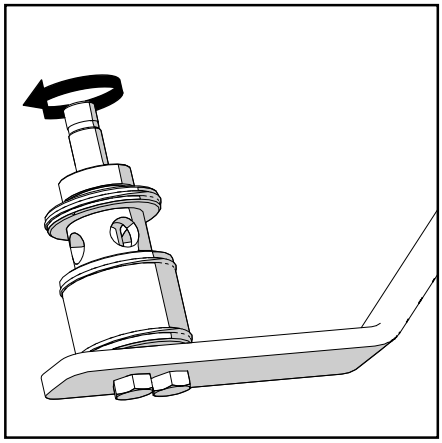

13. *Screw two 1/4" bolts through the cartridge removal tool handle and into the cartridge. Tighten the poppet retainer screw using a 5/32" hex key and torque to 18 - 22 in.lbs.* ***DO NOT OVER-TIGHTEN THE RETAINER SCREW!!***

    Note *Ensure the cartridge is correctly assembled by pushing the poppet with your thumb, it should move freely. Also shine a light into the poppet and check to ensure the rubber creates a seal.*

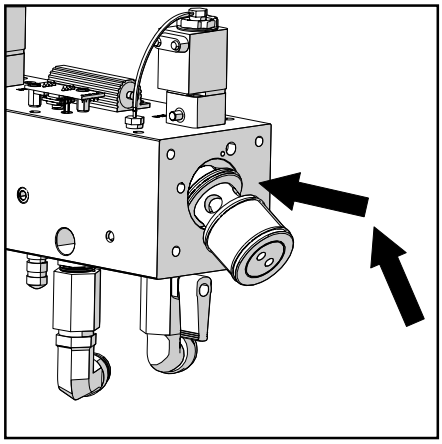

14. *Apply a light coat of Lubriplate 105 grease to the outer O-rings and the valve body cartridge port, in order to insert the cartridges. Begin by holding the cartridges on a ~45deg angle to ensure the bottom O-ring doesn't slice or roll out of place. Once clear push the cartridge in until it is seated flush within the valve body. Check O-rings carefully upon installation to ensure they are not damaged.*

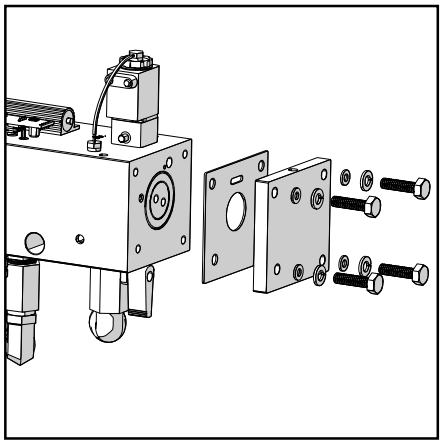

15. *Use new gaskets when installing the end-caps. Begin by hand tightening all 8 [4 per side] 1/4" bolts. Follow up and torque in a cross pattern to 90 in.lbs. Perform this torquing sequence 3 times.*

    Note *Keep in mind the bolt where the hose clamp needs to go. It is easiest to install the clamp at this time as well.*

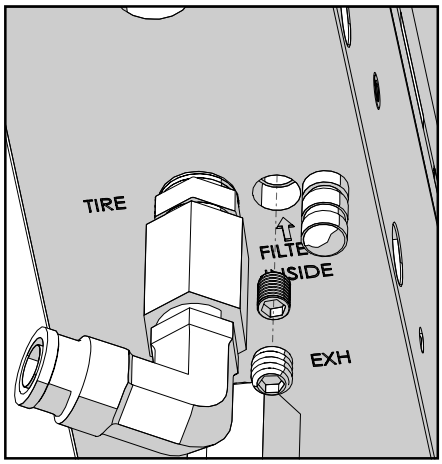

16. *Add a light coat of oil to the Stainless Steel sintered filter, then install it with a 5/32" hex key until hand tight. Once tight, apply a small amount of Loctite 5452 pipe sealant to the 1/8" NPT plug and reinstall into the valve body using a 3/16" hex key.*

    Note *On later design valves have a 1/4" NPT Schrader fitting installed in this port.*

17. *Included in the rebuild kit is a new style check valve [TPC Part# MAS700H] and a 3/8" hex nipple [TPC Part# 122-C]. Apply Loctite 5452 pipe sealant to the threads of the hex nipple before installing into the valve and tightening with a 11/16" [18mm] wrench.*

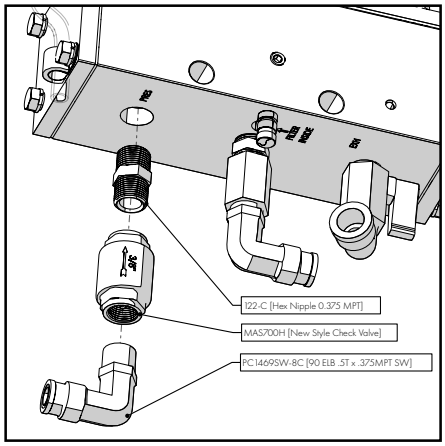

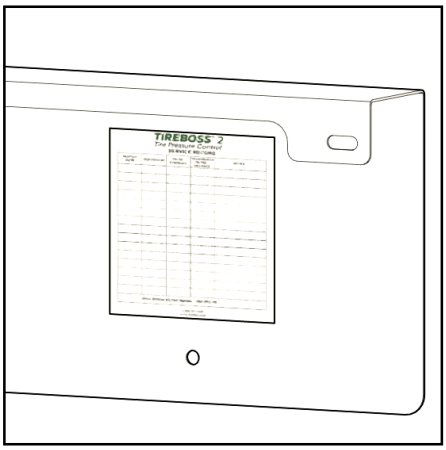

18. *Apply Loctite 5452 to the threads on the other side of the hex nipple*

19. *Install new style check valve onto the hex nipple and tighten using a 13/16" [21mm] wrench.*

    ***IMPORTANT* Ensure that the "direction of flow" arrow on the check valve is pointing into the VCU block**

20. *Apply Loctite 5452 pipe sealant to elbow fitting and tighten the fittings with a 13/16" [21mm] wrench.*

21. *Re-assemble all air lines and cable connections that were removed prior to service. Open all manual wheel valves, run system and complete testing. Ensure that there are no air leaks.*

22. *The Primary Valve Service is now complete. Record the date, and type of service (Primary) performed on the truck's maintenance chart located on the inside of the steel SCU cover.*

SECONDARY VALVE SERVICE

NOTE: There are 4 different pressure transducer arrangments that you may find under the VCU valve cover.

Refer to this page to visually identify your arrangment and procedure with the instructions that follow.

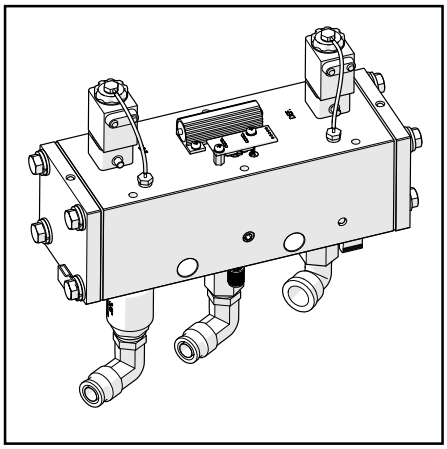

Single Sensor Transducer Board

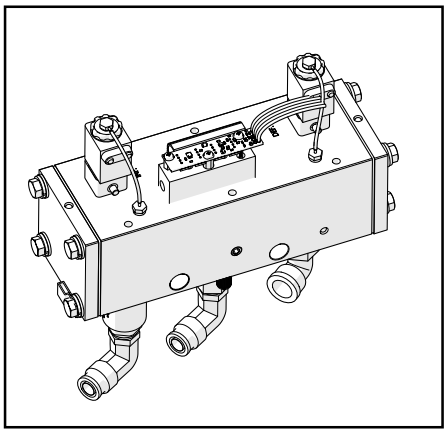

Dual Sensor Transducer Board

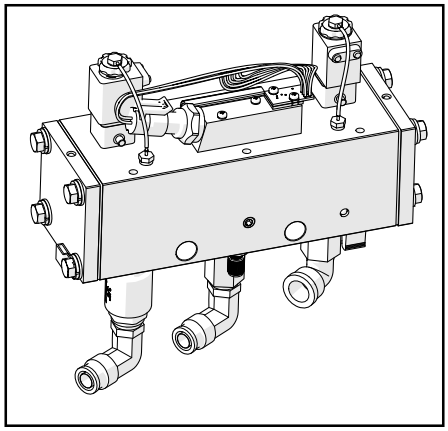

Enclosed Transducer Retrofit Kit

***Note** The retrofit kit is used to replace all previous Single + Dual board designs.*

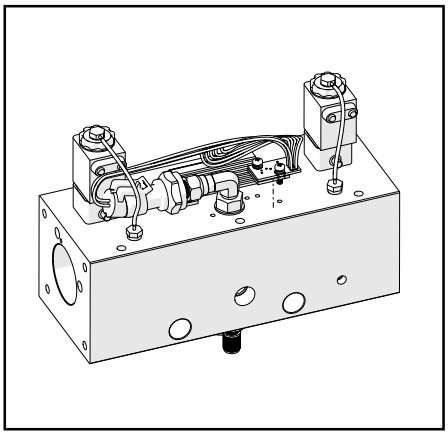

Enclosed Transducer - CURRENT DESIGN Direct to Valve

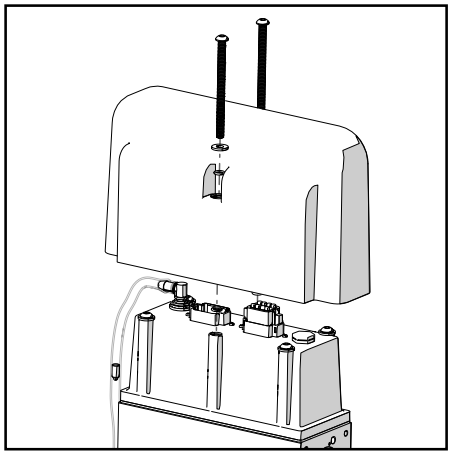

1. *Remove the outer protective plastic cover from the VCU by loosening the two center bolts holding it down with a 5/32" hex key or wrench. Take care and DO NOT loose O-Rings.*

   Note *There are two pairs of O-Rings and Washers sealing this cover. The first is between the bolt head and the outer cover. The second is between the outer cover and the VCU Cap.*

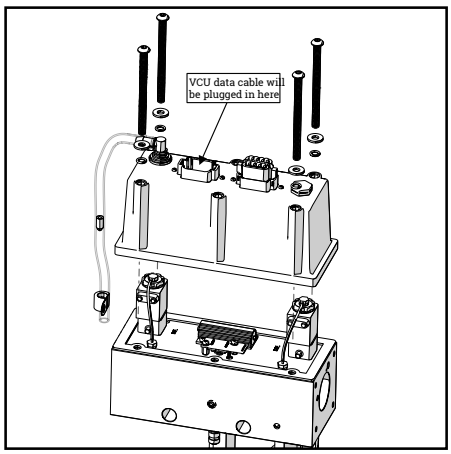

2. *Unplug the VCU data cable(s) and remove the four remaining 1/4" bolts with a 5/32" hex key or wrench.*

3. *Lift the VCU Cap off the body SLOWLY. There are wires and connections between the cap and the body that must not be damaged. The cap gasket will be replaced upon re-assembly.*

   Note *Inspect internal parts, underside of cap, and valve body for signs of moisture. This area must be dry at all times. If signs of moisture are found, isolate and remedy water entry location before continuing with valve service procedure.*

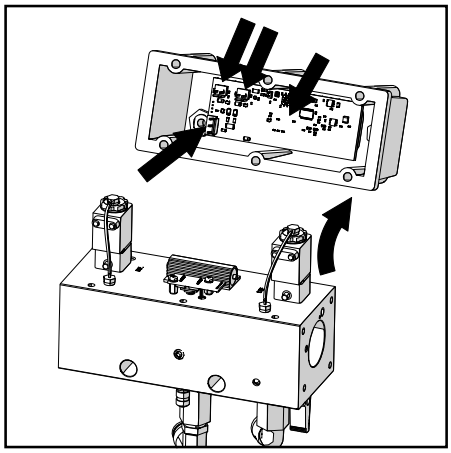

4. *Disconnect the four electrical connectors from the board in the VCU Cap.*

   Note* *take a picture or make a note to remind your self of the orientation of the VCU Cap on the valve body. This will be important during re-assembly.*

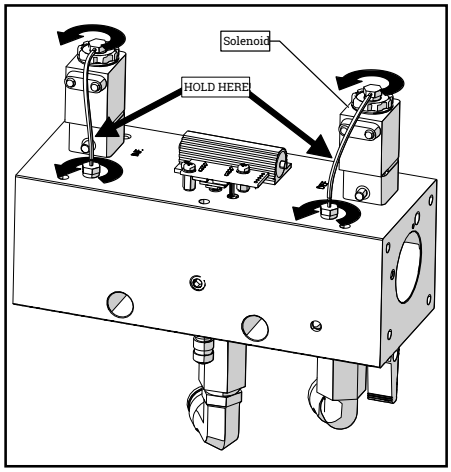

5. *While holding the small solenoid tubing, use a 5/16" [8mm] wrench to remove the straight fittings screwed into the main VCU body.*

6. *Use a 5/16" [8mm] wrench to remove the vent from the top of the solenoid. Take note of it's orientation.*

   Note *For both steps 5 & 6, avoid removing the tubing from the nipple as there is a chance of ripping the hose during this process.*

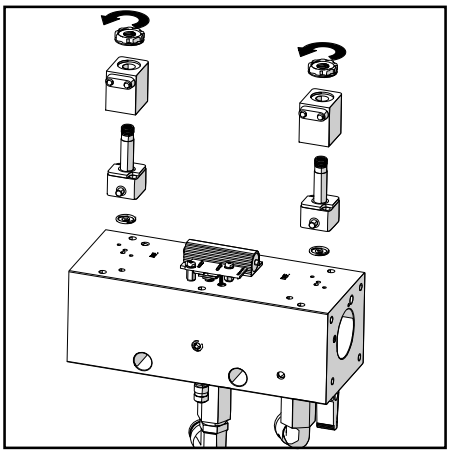

7. *Remove the plastic nut by hand from the top of the solenoid to release the coils.*

8. *Remove the solenoid plunger using a No.2 Phillips screwdriver. Check the 2 surface mount O-Rings for damage. Check pilot circuit for dirt, debris, or moisture. O-rings will be replaced during re-assembly*

   Note *Take notice of plunger orientation. It will be important for reassembly.*

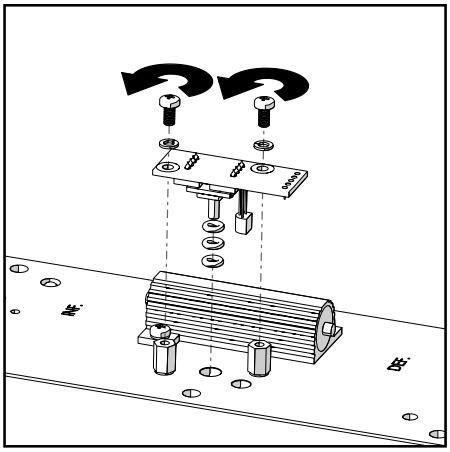

For Single Sensor Transducer Board;

9. *Remove the two No.2 phillips head screws and accompanying lock washers attaching the* ***SINGLE SENSOR*** *transducer board to the standoffs. Ensure to remove all three O-Rings and check ports for dirt, debris, or moisture. O-Rings will be replaced during re-assembly.*

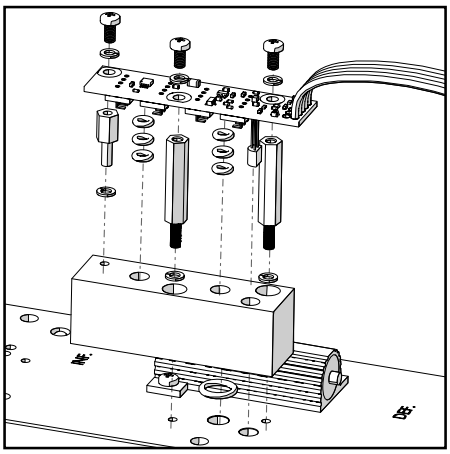

For Dual Sensor Transducer Board;

10. *Remove the three No.2 phillips head screws and accompanying lock washers attaching the* ***DUAL SENSOR*** *transducer board to the dual sensor manifold block. Remove the 2 standoffs and accompanying lock washers holding the manifold block the the valve body. Ensure to remove all 7 O-Rings during removal [six O-Rings in the manifold blocks ports and one sealing the manifold block to the valve body] and check ports for dirt, debris, or moisture. O-Rings will be replaced during re-assembly.*

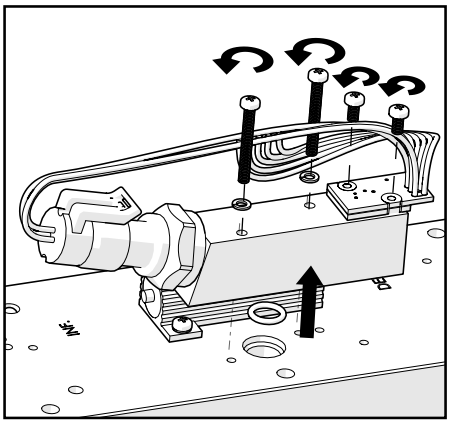

For Enclosed Transducer Retrofit Kit;

11. *Unplug connector on end on transducer & remove sensor board from manifold - held in with 2 screws.*

12. *Remove 2 screws to disassemble manifold from valve block. Remove transducer from manifold.*

    Note *The transducer boards are sensitive and must not be exposed to any moisture throughout this process [i.e. water, cleaning chemicals, etc...]*

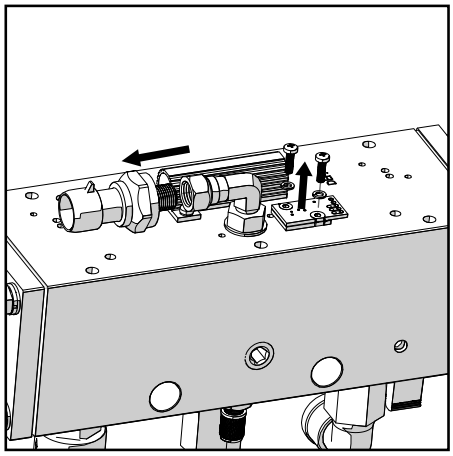

For Enclosed Transducer - Direct to Valve;

13. *Unplug connector on end of transducer & remove the sensor board with 2 screws. Remove transducer from elbow and then elbow from valve block.*

    Note *It is not necessary to remove the heater element for cleaning, rendering the next step optional. If the heater is removed, ENSURE NEW thermal heat compound is applied to cover the ENTIRE base surface during the re-assembly process.*

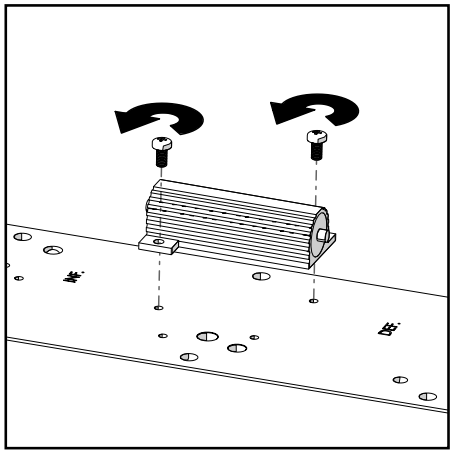

14. *Remove the two No.2 phillips screws and accompanying lock washers attaching the heater to the block.*

The components are now sufficiently disassembled with access to all ports in the valve body for cleaning. After a thorough cleaning of all passages and components, the valve is ready to be reassembled.

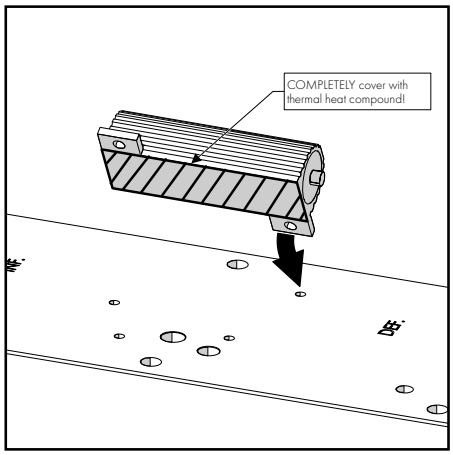

15. *For reassembly, use the provided thermal heat compond to coat the ENTIRE base surface of the heater. Place the heater onto the valve body and allign phillips screws and accompanying lock washers with their holes in the block. Torque these screws to 100 in.oz [~6.25 in.lbs.].*

For Single Sensor Transducer Board;

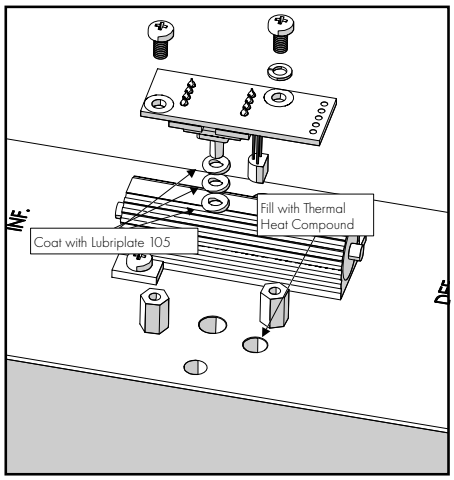

16. *Apply a light coat of Lubriplate 105 onto the stem of the **SINGLE SENSOR** transducer board. Slide three new O-rings onto the stem and apply Lubriplate 105 to the new O-Rings prior to installation into the port.*

17. *Apply thermal heat compond to the sensor probe bore in the block. Ensure that there is enough compound in the bore to take up all remaining space once board is seated.*

18. *Allign the two phillips head screws and accompanying lock washers with standoffs and torque to 100 in.oz. [~6.25 in.lbs]*

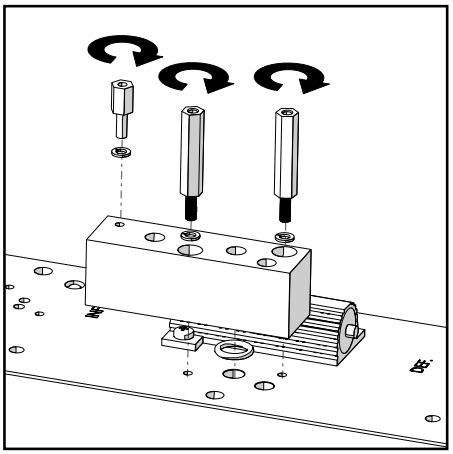

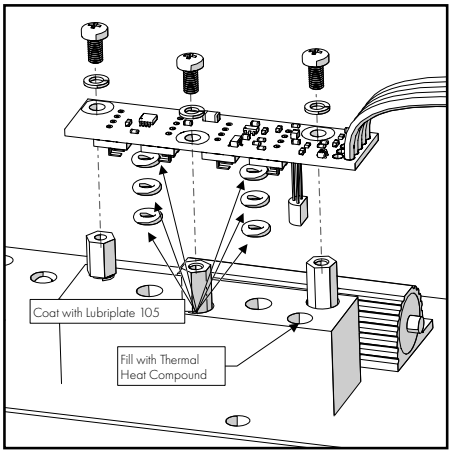

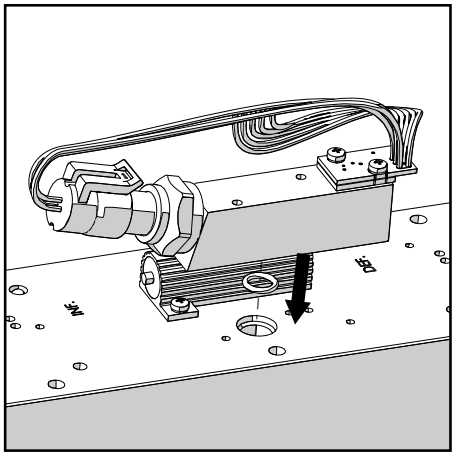

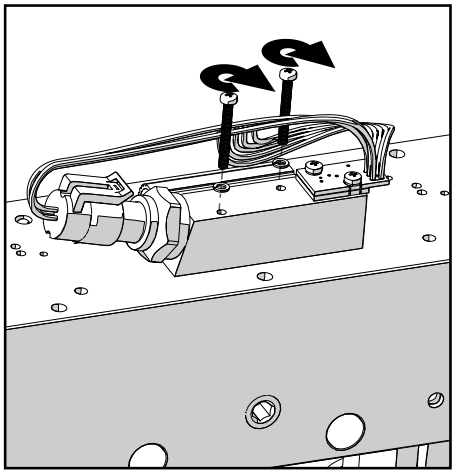

For Dual Sensor Transducer Board;

****Note**** *Dry fit the assembly prior to installing. The wiring harness MUST point to the "deflate" side of the valve.*

19. *Install a new O-Ring between the transducer manifold block and valve body. Use the two longer standoffs and accompanying lock washers to attach the manifold block to the valve body. Torque to 100 in.oz. [~6.25 in.lbs.]. Install the shorter hex standoff and torque it to 100 in.oz.[~6.25in. lbs.] as well.*

20. *Apply a light coat of Lubriplate 105 onto the stems of the* ***DUAL SENSOR*** *transducer board. Slide six new O-rings onto the stems and apply Lubriplate 105 to the new O-Rings prior to installation into the port.*

21. *Apply thermal heat compond to the sensor probe bore in the block. Ensure that there is enough compound in the bore to take up all remaining space once board is seated.*

22. *Allign the three phillips head screws and accompanying lock washers with standoffs and torque to 100 in.oz. [~6.25 in.lbs]*

For Sensor Transducers Retrofit Kit;

23. *Install the transducer in the transducer manifold.*

24. *Install a new O-Ring between the transducer manifold and valve body. Use two longer screws to secure the manifold to the valve block. Torque to 100 in.oz. [~6.25 in.lbs].*

25. *Evenly spread thermal paste under the sensor board and use the smaller screws to mount the sensor board on top of the manifold.*

26. *Plug in the transducer connector.*

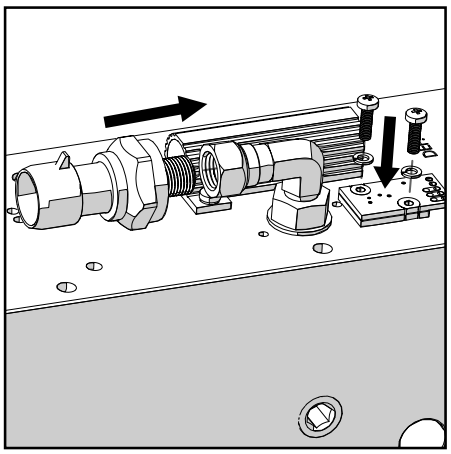

For Enclosed Transducer - Direct to Valve;

27. *Install the elbow into the valve block and tighten it with swivel nut facing opposite direction to sensor board. Install the transducer into the elbow & tighten the swivel nut.*

28. *Evenly spread thermal paste under the sensor board and use the smaller screws to mount the sensor board on top of the manifold.*

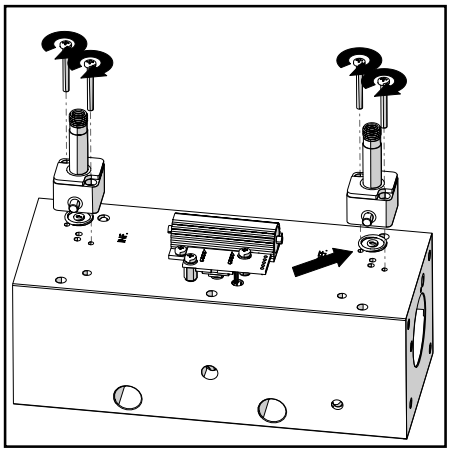

29. *Plug in the transducer connector.*

30. *Ensure two new O-Rings are seated in the bottom of the solenoid base. Apply a light coat of Lubricate 105, before installation. Then torque mounting screws to 100 in.oz [~6.25 in.lbs.].*

    ***Note** If mounting screws are too lose, the O-rings will not seal and leak air. If they are too tight the O-rings may squish and block pilot hole.*

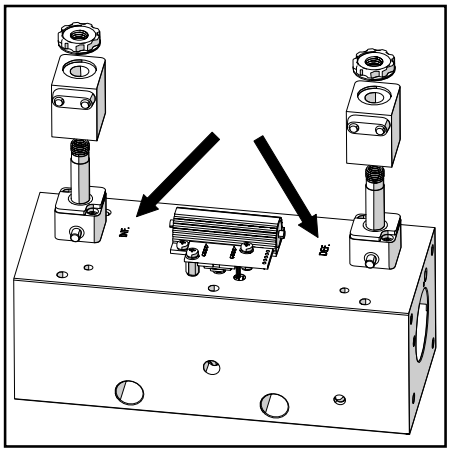

31. *Slide the solenoid coil onto the shaft with the wire leads facing in the same orientation as when you took it apart.*

    ***Note** Take notice of the INF and DEF markings on the valve body. These refer to Inflate and Deflate and will be critical later on to ensure proper connections for a functional valve.*

32. *Screw the plastic nuts onto the solenoid plungers hand tight.*

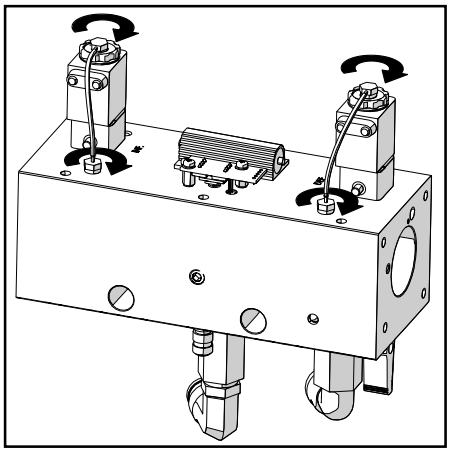

33. *Re-install solenoid vent fittings into top of solenoid using a 5/16" [8mm] wrench. Tighten to original orientation.*

34. *Re-install the straight vent fitting into the VCU block using a 5/16" [8mm] wrench. Similar to the removal process, hold the hose to help reduce strain on the tube.*

    ***Note** If tubing is damaged, it will need to be cut off and replaced with a new piece from maintenance kit.*

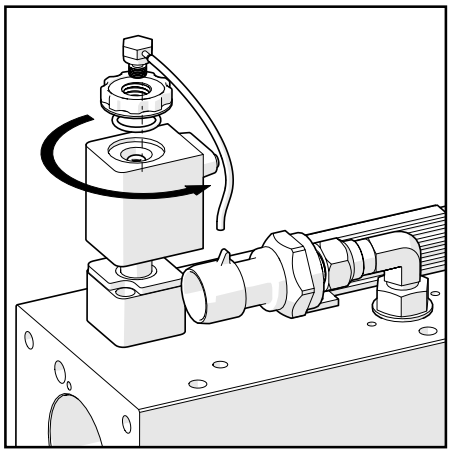

Note *The solenoid installed on the "DEF" side of the block must be plugged into the "DEFLATE" terminal on the board. The "INF" solenoid must be plugged into the "INFLATE" terminal on the board.*

35. *For Enclosed Transducer Retrofit Kit AND Enlcosed Transducer - Direct to Valve, the Inflate solenoid must be rotated 90° so that the leads face inward towards the heater.*

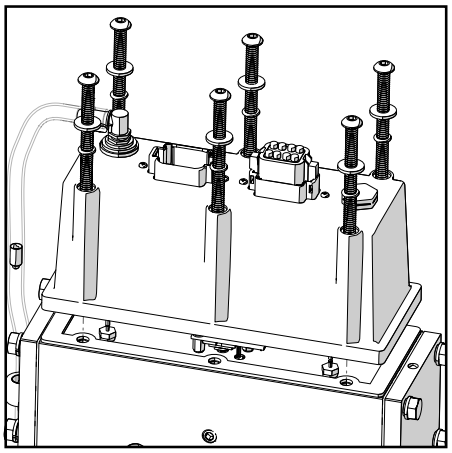

36. *Set the new valve cover gasket and the VCU cap on top of the valve and re-connect the four electrical connections.*

37. *Hand tighten all 6 bolts along with their respective O-rings and washers. Go around three times in a cross pattern torquing to 25 in.lbs.*

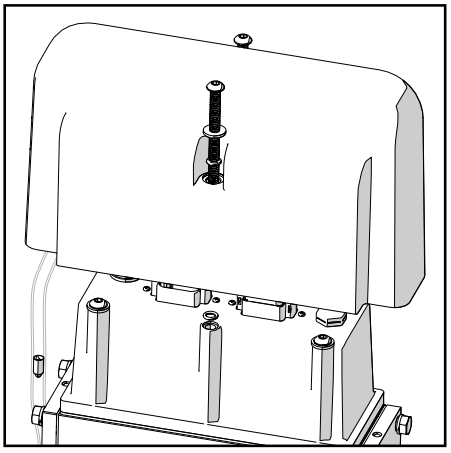

37. *Remove the two middle bolts. Slide the inner O-Rings up the bolt to the underside of the outer protective cover Install the outer VCU protective cover, and the additional O-rings and washers. Go around twice torquing these bolts to 25 in.lbs.*

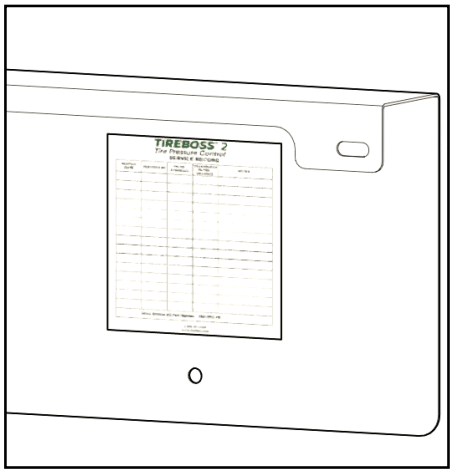

38. *The Secondary Valve Service is now complete. Record the date, and type of service (Secondary) performed on the truck's maintenance chart located on the inside of the steel SCU cover.*

Replacing/Upgrading SCU

NOTE: There are 3 different System Control Unit (SCU) versions.

Refer to this page to visually identify your SCU version.

SCU-V1 with internal transducers

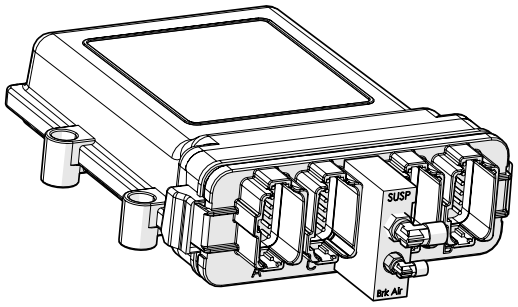

- *SCU-V1 with internal transducers can be updated to SCU-V1 with external transducers.*
- *Requires kits: 1000-260-LS (for load sense) or 1000-260-NLS (for non load sense).*
- *Kits include cable assembly to fit SCU and the block with transducers for load sense/no load sense.*

SCU-V1 with external transducer(s)

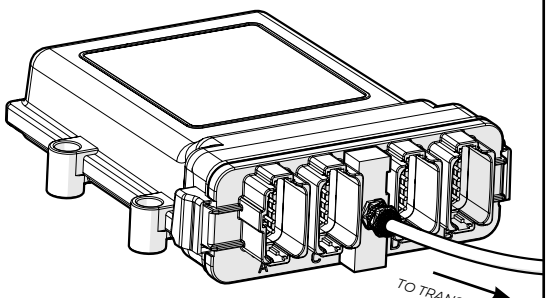

Refer to Service Bulletin: 2024.02.13 - SCU V1 Transducer Field Update - IT

External transducers for load sense: Kit 1000-260-LS

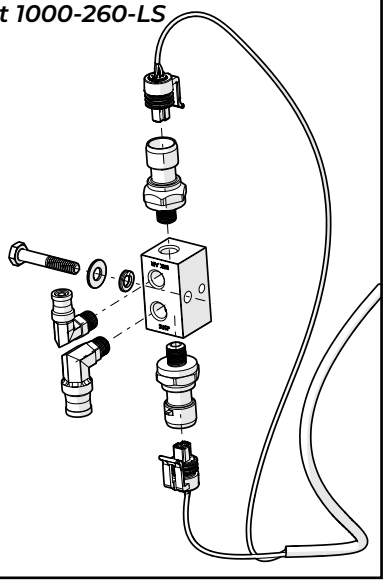

External transducer for non load sense: Kit 1000-260-NLS

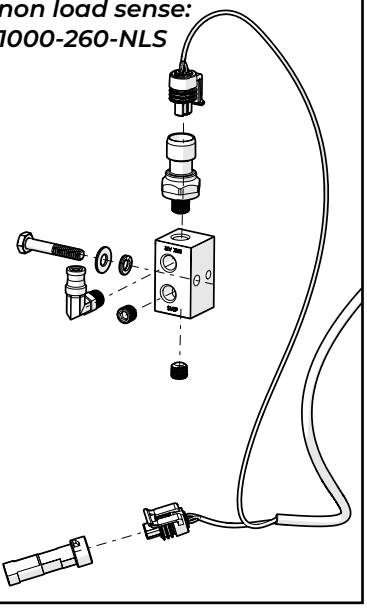

SCU-V2 with external transducer(s) and diagnostic plug

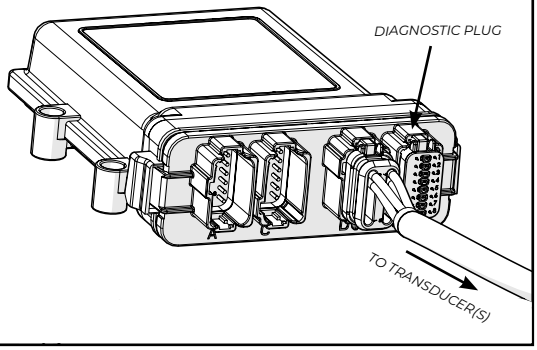

- *Both designs of SCU-V1 can updated to SCU-V2 and requires the complete SCU to be replaced.*

Refer to the following page if replacing SCU-V1 with SCU-V2

SCU-V2 with external transducers and diagnostic plug

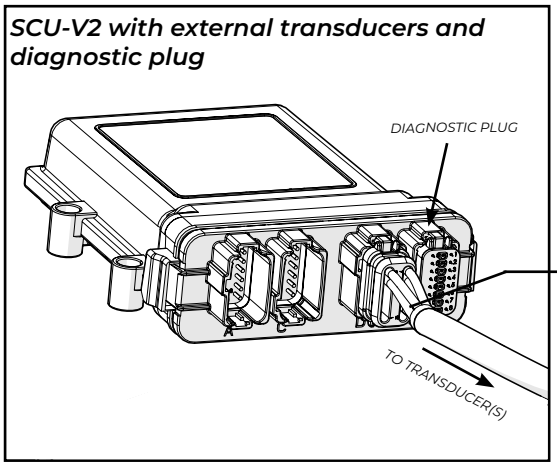

CABLE 1000-225
SCU-V2 CABLE - EXTERNAL TRANSDUCERS ONLY

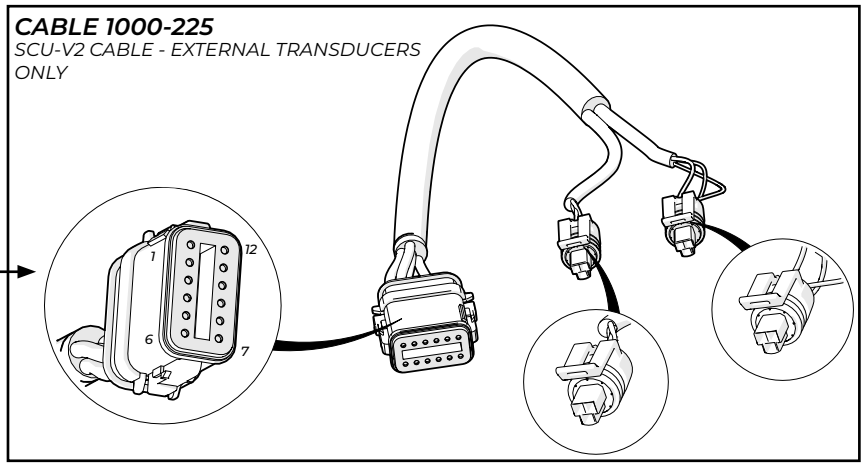

Replacing SCU-V1 with SCU-V2 requires kits: 1000-245-LS (for load sense) or 1000-245-NLS (for non load sense) shown below. Cable 1000-225 (shown above) is supplied with SCU-V2.

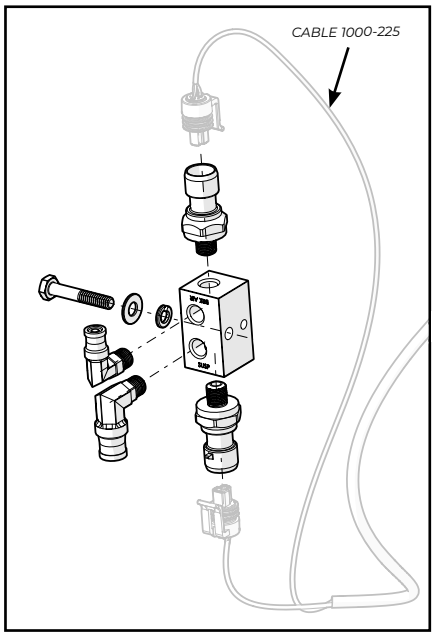

1000-245-LS
2 transducers + block

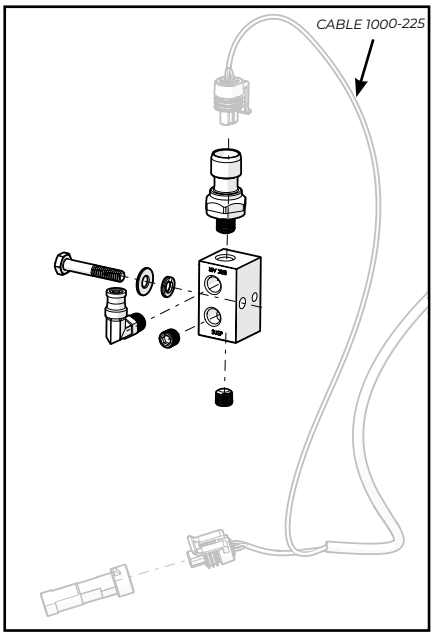

1000-245-NLS
1 transducer + block

These kits do not include the transducer cable (1000-225) shown above.

For a system equipped with a datalogger, an adaper cable (1000-496) is required to fit the existing 1000-420 datalog cable used with SCU-V1.

CABLE 1000-496
SCU-V1 TO SCU-V2 DATALOGGER ADAPTER

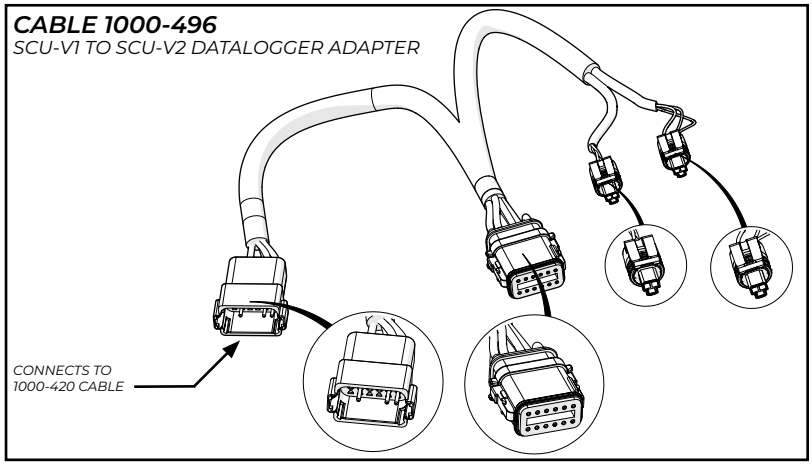

Replacing VCU Main Board

Before ordering or replacing a VCU main board, it is highly advised to consult a TPC International service technician to confirm the board needs to be replaced.

* IMPORTANT *

PAY SPECIAL ATTENTION TO THE LOCATION AND ORIENTATION OF COMPONENTS AND CABLES LOCATED UNDER THE VALVE CAP. THE VALVE COVER WILL FIT WITHOUT FORCING WHEN CORRECTLY ALLIGNED. THE INFLATE/DEFLATE SOLENOID CONNECTORS IN THE CAP NEED TO BE ALIGNED OPPOSITE TO THE TRANSDUCER AS SHOWN.

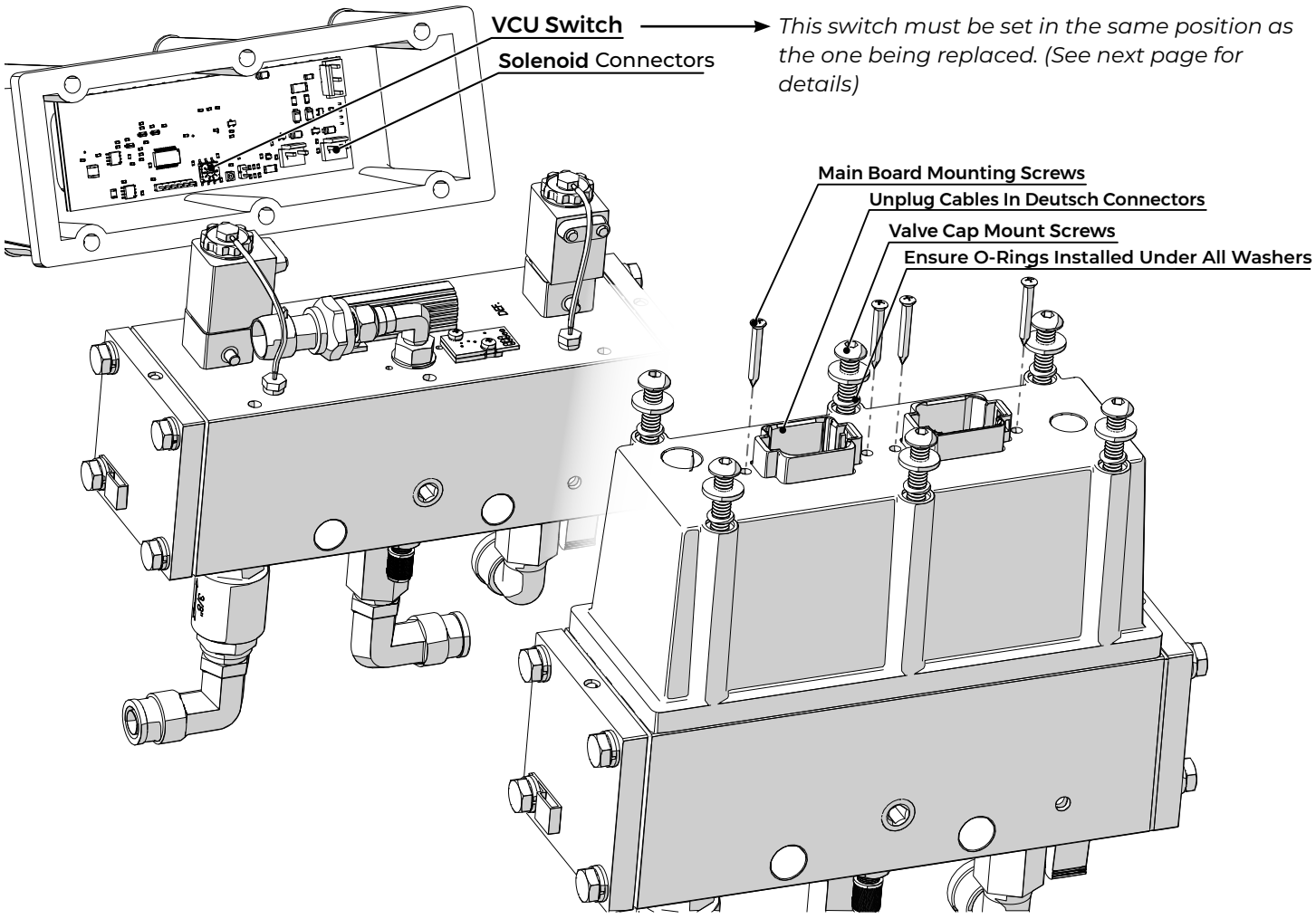

This document showcases the latest TB2 Pressure Transducer.

Rotary switch positions are set as follows:

System Type	Valve 1	Valve 2	Valve 3
Drive Only	Drive-Rotary Switch Position 1		
Steer Drive	Steer Rotary Switch Position 1	Drive-Rotary Switch Position 2	
Drive Trailer	Drive-Rotary Switch Position 1	Trailer-Rotary Switch Position 2	
Steer Drive Trailer	Steer Rotary Switch Position 1	Drive-Rotary Switch Position 2	Trailer-Rotary Switch Position 3

The default switch position for a one-valve system (e.g. Drives only) is set as position 1.

For vehicles that have more than one valve:

1. *Open the cover on the valve containing the old VCU and look at the rotary switch located on the VCU (see photos below).*

2. *Ensure that the rotary switch on the replacement VCU is set to the same position. (e.g. position 2 for Trailer on Drive/Trailer systems, or position 2 for Steer on a Drive/Steer system. A three valve system would have the Steer Valve set to position 3.)*

3. *This would also be the case if the entire valve assembly is being replaced.*

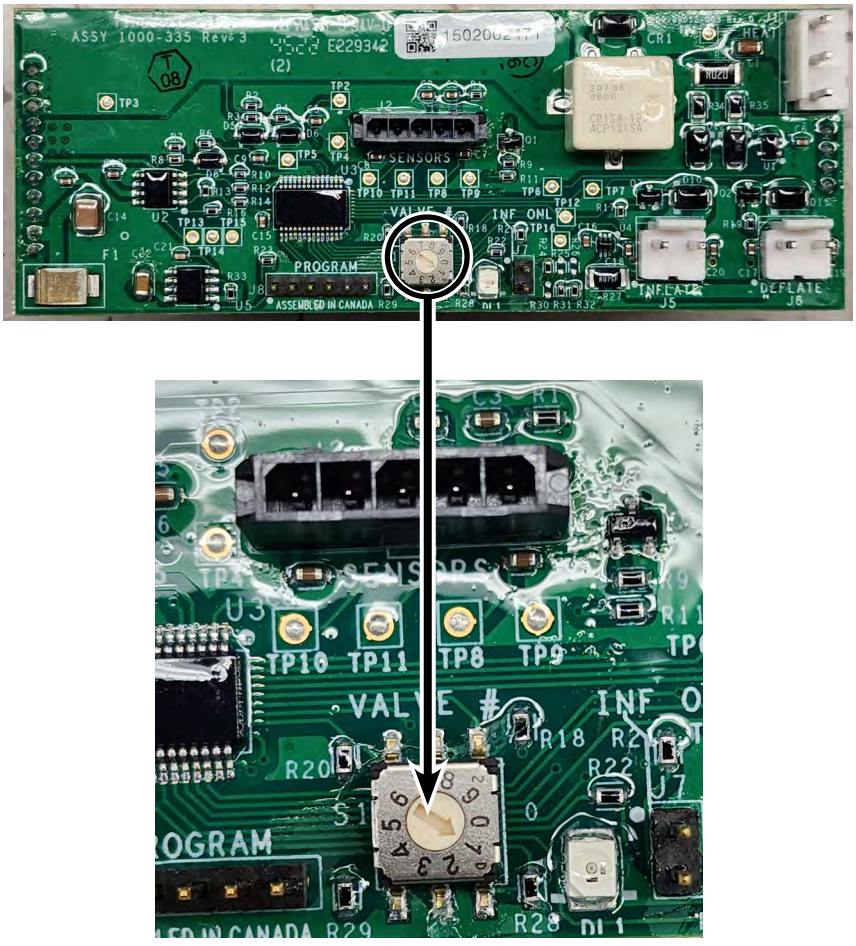

SECTION 3

OCU OPERATIONS

OCU Operation Screens

*The following diagrams have been included to assist in navigating the OCU menu screens. While only the **Main Screen** will be used during day-to-day operation, the various other screens installed onto the unit will be required for various updating, diagnostic and trouble shooting procedures.*

There are 4 navigational menu screens all accessed from the gear symbol on the main page, they are;

***Initial Menu Screen** - First settings screen with top level menu settings and the ability to change application, view training video, and to check for active alarms/warnings*

***System Status Screen** - Accessed by the computer/magnifying glass icon(5) to view status of various systems, and ability to get into details*

***Settings Menu Screen** - Accessed by the cog icon (2) on the initial screen. Provides access to user adjustable parameters.*

***Maintenance Settings Screen** - A password protected screen where critical system settings can be altered*

Throughout this section, the screens displayed on the following two pages will be referenced consistently to aid in navigating the OCU user Interface.

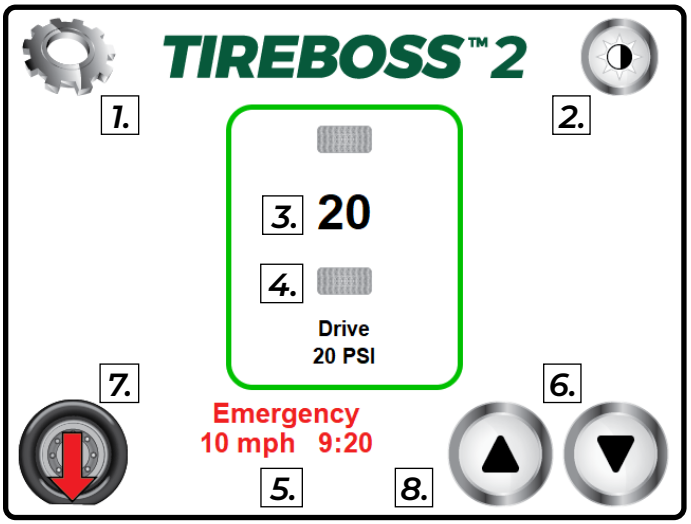

Main Screen

Ref.	Purpose
1	Access **Initial Menu** Button
2	Dark/ Light Screen Setting
3	Current Tire Pressure
4	Loaded Vs. Unloaded Status
5	Active Setting
6	Change Pressure Setting
7	Emergency Pressure Button
8	Power Button [Underside of Case]

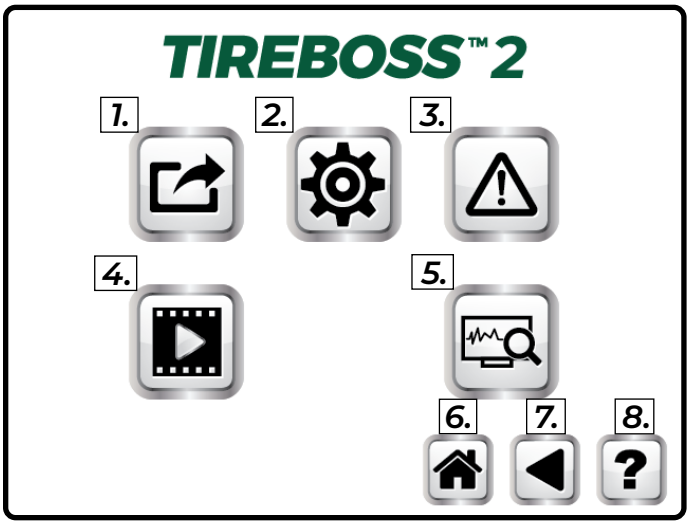

Initial Menu Screen

Ref.	Purpose
1	**Application Select Screen**
2	Access **Settings Menu** Button
3	Alarm Status Button
4	Driver Training Video
5	Access **System Status Menu** Button
6	Return to **Main Screen**
7	Return to Previous Screen
8	Help Button - describes icon functions

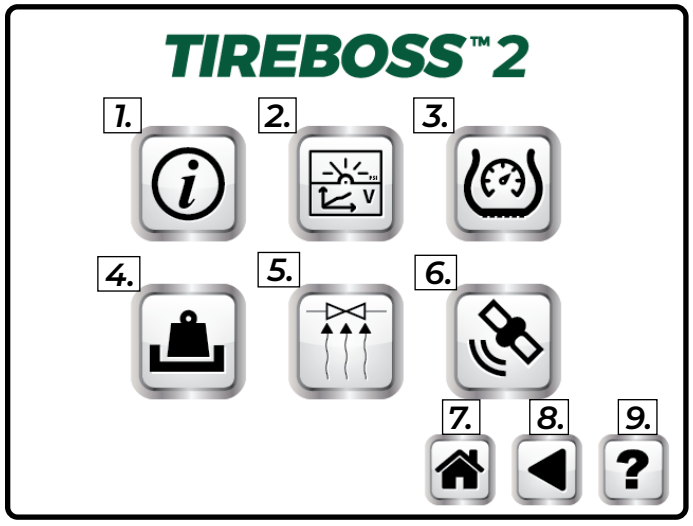

System Status Menu

Ref.	Purpose
1	Access **System Information Screen**
2	System Status Button
3	Valve Status Button
4	Valve Load Status Button
5	Heater Status Button
6	GPS Information Button
7	Return to **Main Screen**
8	Return to Previous Screen
9	Help Button - describes icon functions

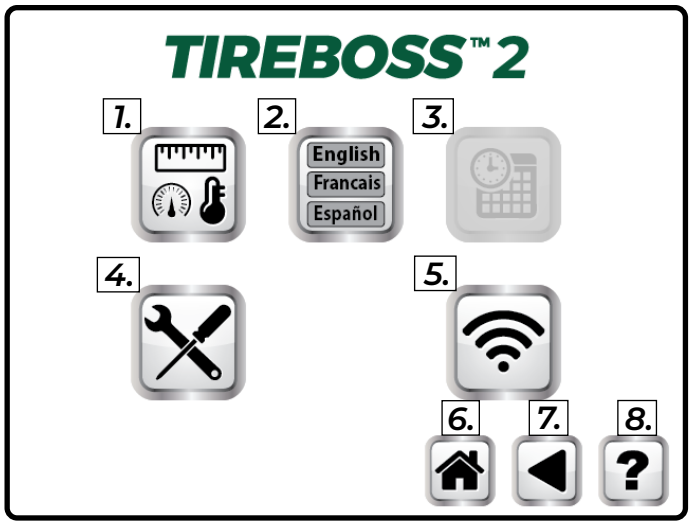

Settings Menu Screen

Ref.	Purpose
1	Change Unit Settings
2	Change Language Settings
3	Change Time & Date Settings
4	Access **Maintenance Settings Screen**
5	**WiFi Settings** Button
6	Return to **Main Screen**
7	Return to Previous Screen
8	Help Button - describes icon functions

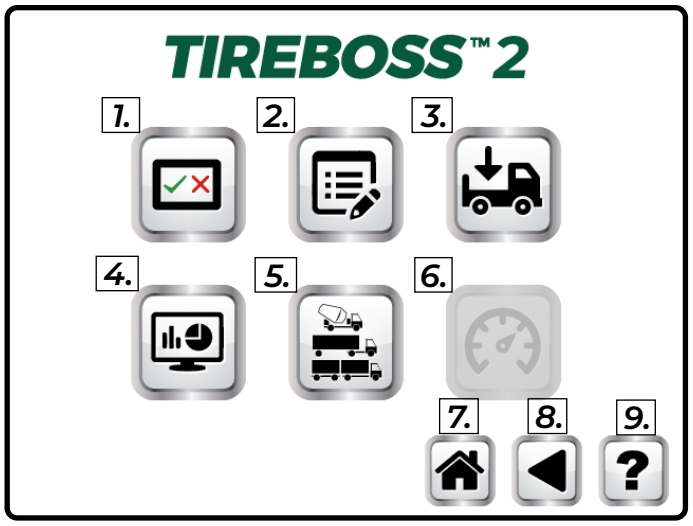

Maintenance Settings Screen

Ref.	Purpose
1	**Enable/ Disable Applications** Button
2	**Edit Applications & Settings** Button
3	**Loaded/ Unloaded Settings** Button
4	Data Logger Settings Button
5	**Configurations** Button
6	Speed Calibration Selection Button
7	Return to Main Screen
8	Return to Previous Screen
9	Help Button - describes icon functions

Selecting Applications

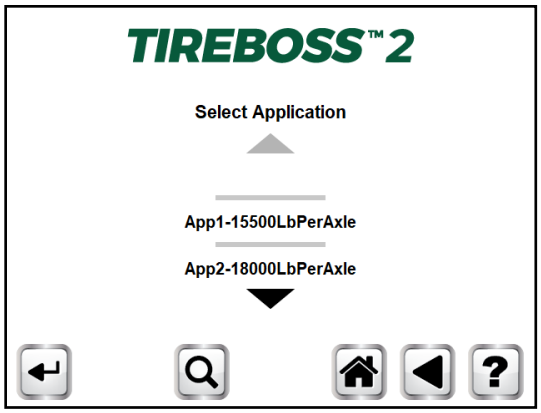

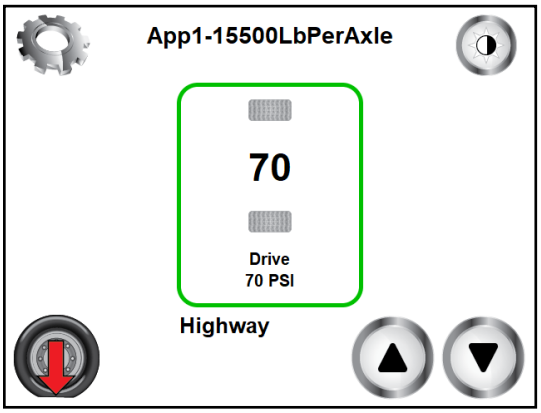

The following steps describe the process of changing between different applications created for and installed onto your TIREBOSS 2 system.

1. *From the **Main Screen**, navigate to the **Initial Menu Screen**.*
2. *From the **Initial Menu Screen**, navigate to the **Application Select Screen**. From here you will be able choose between the active applications on your device.*
3. *Using the arrows on the screen, locate the application you desire between the two gray horizontal bars.*

   **NOTE* If the desired application is greyed out, follow the enabling application procedure below.*
4. *Once satisfied, Press and hold the "Enter" key. Once accepted you will be kicked back to the Main Screen and the application name will be displayed above the tire pressure status.*

Enabling/ Disabling Applications



The following steps describe the process of activating or deactivating applications installed onto your TIREBOSS 2 system.

1. *From the **Main Screen**, navigate to the **Initial Menu Screen**.*
2. *From the **Initial Menu Screen**, navigate to the **Settings Menu Screen**.*
3. *From the **Settings Menu Screen**, navigate to the **Maintenance Settings Screen**.*



4. *From the **Maintenance Settings Screen**, select the **Enable/ Disable Application** button to access the menu for both enabling AND disabling applications.*

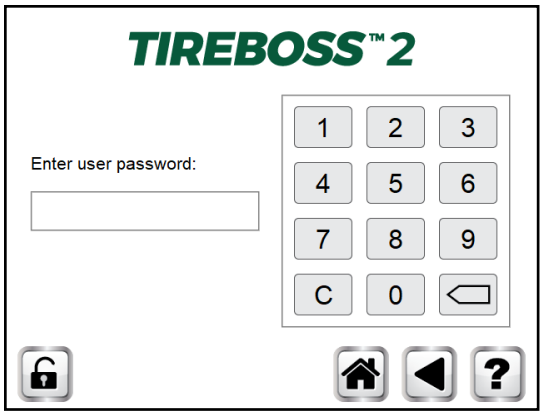

5. *Selecting the Enable/ Disable Application button will automatically trigger a security screen asking for the user password.*
6. *Enter the user password followed by selecting the "unlock" button in the screens bottom left corner.*

   NOTE** User password is **15803
7. *This will allow access to the application screen and allow for desired changes to be made.*

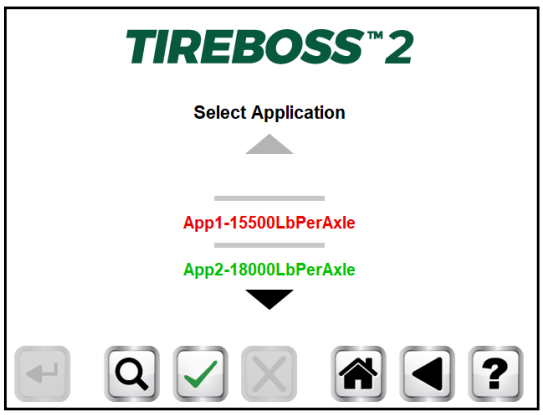

To Enable an Application;

1. *Find the desired application that needs to be enabled [will appear red in colour when inactive], and using the arrows position it between the two grey lines.*
2. *Once positioned, select the green check mark located on the bottom edge of the screen.*
3. *Press and hold the enter button to confirm the change. This will kick you back to the Maintenance Settings Screen.*
4. *Follow the Selecting Application procedure on page 3-3 to make the application active.*

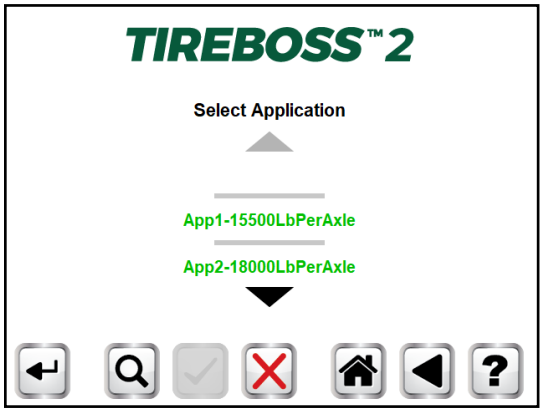

To Disable an Application;

1. *Find the desired application that needs to be disabled [will appear green in colour when active], and using the arrows position it between the two grey lines.*
2. *Once positioned, select the red 'X' mark located on the bottom edge of the screen.*
3. *Press and hold the enter button to confirm the change. This will kick you back to the Maintenance Settings Screen.*
4. *Follow the Selecting Application procedure on page 3-3 to make the application active.*

New Configuration Download



The following steps describe the process of downloading configurations already installed onto your TIREBOSS 2 system.

1. *From the **Main Screen**, navigate to the **Initial Menu Screen**.*
2. *From the **Initial Menu Screen**, navigate to the **Settings Menu Screen**.*
3. *From the **Settings Menu Screen**, navigate to the **Maintenance Settings Screen**.*



4. *From the **Maintenance Settings Screen**, select the **Configurations** button to access the menu for both activating AND deactivating system configurations.*

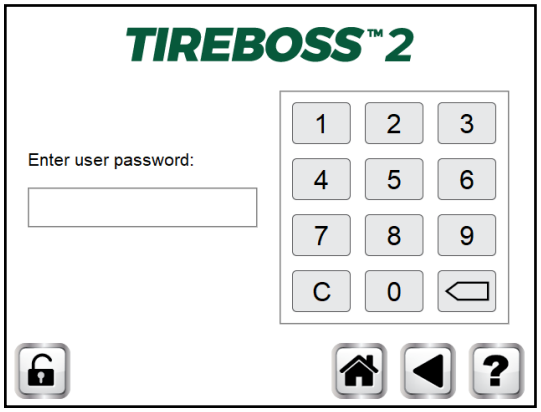

5. *Selecting the **Activate/ Deactivate Configuration** button will automatically trigger a security screen asking for the user password.*
6. *Enter the user password followed by selecting the "unlock" button in the screens bottom left corner.*

   NOTE** User password is **15803

7. *This will allow access to the application screen and allow for desired changes to be made.*
8. *Locate the configuration that needs to be activated and using the arrows, position the configuration name between the two grey lines.*

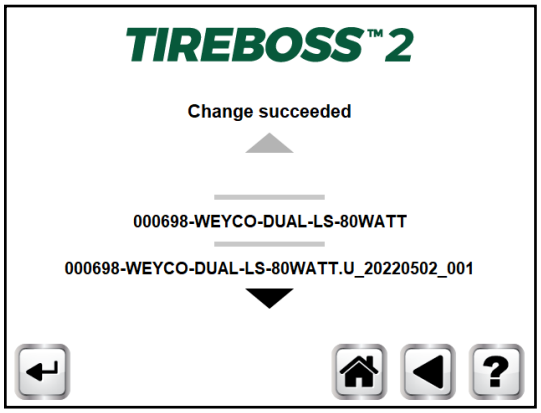

9. *Once positioned, select the enter icon located in the bottom left corner of the screen.*
10. *Press and hold the enter button to confirm the change. The message will progress from "Change in Progress" to "Change Succeeded".*
11. *The new configuration is now active and you can return to the homescreen.*

***Caution** You will need to contact TIREBOSS to determine the best configuration for your application.*

Editing Load Sense Pressure

To edit Load Sense Pressure, follow the steps below:

1. *On the Home screen click on the System Setup icon.*



2. *Press the System Settings button.*



3. *Click on the Maintenance icon.*



4. *Press the Load Sense button.*



5. *Enter password 30851*
6. *Highlight Loaded Set Point Field using arrow keys.*

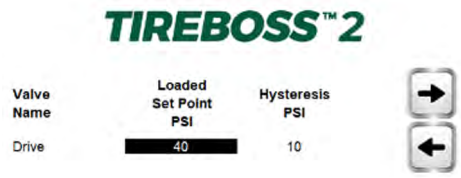

7. *Press the Magnifying Glass icon.*



8. *Using arrow keys. select the desired set point.*



9. *Press and hold the Enter button (lower left corner).*



10. *Tap on the Home button to return to the main screen.*



Connecting OCU to WiFi









The following steps describe the process that must be followed in order to effectively connect the OCU of your TIREBOSS 2 system to a WiFi network.

1. *From the **Main Screen**, navigate to the **Initial Menu Screen**.*
2. *From the **Initial Menu Screen**, navigate to the **Settings Menu Screen**.*
3. *From here select the **WiFi Settings button** located in the bottom right corner of the screen.*
4. *From the **WiFi Settings Screen**, a list of previous added networks will appear. Use the on screen arrows to position your desired network between the horizontal gray bars.*

   NOTE *If the network you are attempting to connect to does not appear on this list, follow the steps on page 3-8 for* ***Adding a new network to OCU****.*
5. *With the desired network positioned. press the magnifying glass found in the bottom left corner of the screen. This will automatically trigger the password screen to appear.*
6. *In the password screen, enter the passcode for the network you are attempting to connect to, press and hold the 'enter' button in the bottom left corner of the screen. This will automatially kick you back to the **WiFi Settings Screen**.*
7. *If connection to the WiFi network is succesfully completed, the network name and a string of numbers will be displayed at the top of the screen.*

Adding a New Network to OCU

NOTE *The TIREBOSS 2 system can only be connected to EITHER a password protected or open network. In other words, public networks that require internet authentication [I.e. McDonald's free WiFi] are not able to be used for this task.*





1. *From the WiFi Settings Screen, press and hold the 'Plus sign' on the bottom of the screen.*

   NOTE *Notice how in the image left that there is a red line through the red WiFi symbol. This indicates that there is no network connection available and that the following process should be followed.*

2. *On the next screen, use the arrows on the OCU screen to position the name of the network you'd like to connect to between the two grey bars.*
3. *Once positioned, press and hold the magnifying glass in the bottom left of the screen to bring up the network password screen.*
4. *On the password screen, enter the password for the network, followed by the 'Enter' button in the bottom left corner of the screen.*
5. *With the network added to the OCU, follow the* ***Connecting OCU to Wifi*** *procedure on page 3-6.*

Connecting as 'TPC-Tech'

The previously outlines processes describe how to add and connect your OCU to various WiFi networks. While this process works in most situations, it has been noticed that there are some situations where a connection issue persists. If this is the case, then connecting to the default 'TPC-Tech' network has proven to work.

The process for ***Creating to 'TPC-Tech' hotspot on IOS devices*** *[Apple devices] can be found on page 3-8.*

The process for ***Creating to 'TPC-Tech' hotspot on Android devices*** *[this includes most other phone brands besides Apple] can be found on page 3-8 as well.*

Connecting to 'TPC-Tech' Hotspot on IOS Devices

Before turning on the OCU, setup the phone hotspot as follows:

The IOS operating system does not allow you to directly change the name of your WiFi hotspot. In order to rename the network name you must change the name of your phone to replicate the 'TPC-Tech' name. This can be done with the following process;

1. *Open the **'Settings'** application on your I-Phone or cellular connected Apple device.*
2. *Find and select the **'General'** settings menu on your device.*
3. *Find and select the **'About'** settings menu on your device.*
4. *Find and select the **'Name'**.*
5. *On the naming screen, start by tapping the '**X**' on the right side of the text field in order to clear the text field. Using the on-screen keyboard, rename the device to **'TPC-Tech'**.*

   ***NOTE** The name of the device is case sensitive. Failure to respect this will result in the OCU not being able to secure a reliable network connection.*
6. *With the name changed, return to the main '**Settings**' screen on your device.*
7. *Select **Cellular** and turn on cellular data if it is off.*
8. *Find and select '**Personal Hotspot**' and turn it on.*
9. *Select "**Allow others to join**".*
10. *Find and select '**WiFi Password**'.*
11. *On the password screen, repeat the process by tapping the '**X**' on the right side of the text field in order to clear the text field.*
12. *Rename the password to **'tpci2018'**. The password is case-sensitive.*

Connecting to 'TPC-Tech' Hotpsot on Andriod Devices

Android devices vary greatly in their interface layout so a step-by-step procedure will be more confusing than benefical here. However, within the hotspot settings menu almost all Android devices will allow you to change the network name and password. In this situation these fields should be renamed as follows.

*Network Name: **TPC-Tech***
*Password: **tpci2018***

***You may now turn on the OCU** and follow Connecting OCU to WiFi process.*

Diagnostic Mode

To troubleshoot a system that is not working as intended, Tireboss 2 is equipped with a Diagnostic Mode. This mode allows a user to manually test the functioning of the system (inflate and deflate at specific valves, heater on/off, etc.) by temporarily disabling the tire pressure algorithm. The Diagnostic Mode is especially useful in scenarios where some hardware issue (leaking hose, valve sticking, vale not opening, etc.) has put the system out of tune. These issues can cause the system to operate in an unexpected/undesired way.

The Diagnostic Mode bypasses the tire pressure control algorithms, airflow restriction tests, pressure estimation during inflate and deflate, etc. It also shows useful data like supply pressure, pressure at valve, heater current and voltage, etc. This allows one to observe the air supply, tires, and hoses for any problems. For instance, a tire leak could be identified by manually operating the inflate valve and watching the pressure drop in some time without the system trying to perform an inflate again to keep the tires up to the desired pressure.

Important information to know about Diagnostic Mode:

1. *It requires a system to be in a functional state, meaning there should be no Com errors, Configuration Errors, and the system has working pressure sensors. It is advised to ensure that the system is functional before entering Diagnostic Mode.*

2. *Up and down arrows in Diagnostic Mode are used to trigger inflate or deflate commands.*

3. *Once an inflate or deflate command is initiated the system will energize the corresponding solenoid for about 30 seconds only and then revert back to normal operation. To test again, you may inflate or deflate again.*

4. *The heater test turns the heater on for about 20 seconds before turning it off again.*

5. *You may still see errors unrelated to tire pressure algorithms, like Low supply pressure, inflate or delate solenoid current errors, heater errors, etc. These will go away when back in normal operation.*

Entering Diagnostic Mode:

1. *From the Main Screen, touch the Gear icon.* 

2. *Touch and HOLD the status icon (lower right) for a few seconds until the password screen appears.* 

3. *Enter the TECH password (30851) and press the unlock icon at lower left corner of the screen.* 

4. *You are now in Diagnostic Mode.*



5. *To exit Diagnostic Mode, return to the Main Screen by selecting the Home icon.*

NOTE: *If a lot of testing has been done to determine the source of a problem, press the "Recalibration" button to reset the algorithms. Then run the system through a complete inflate and deflate cycle (high to low pressure, then back to high pressure).*



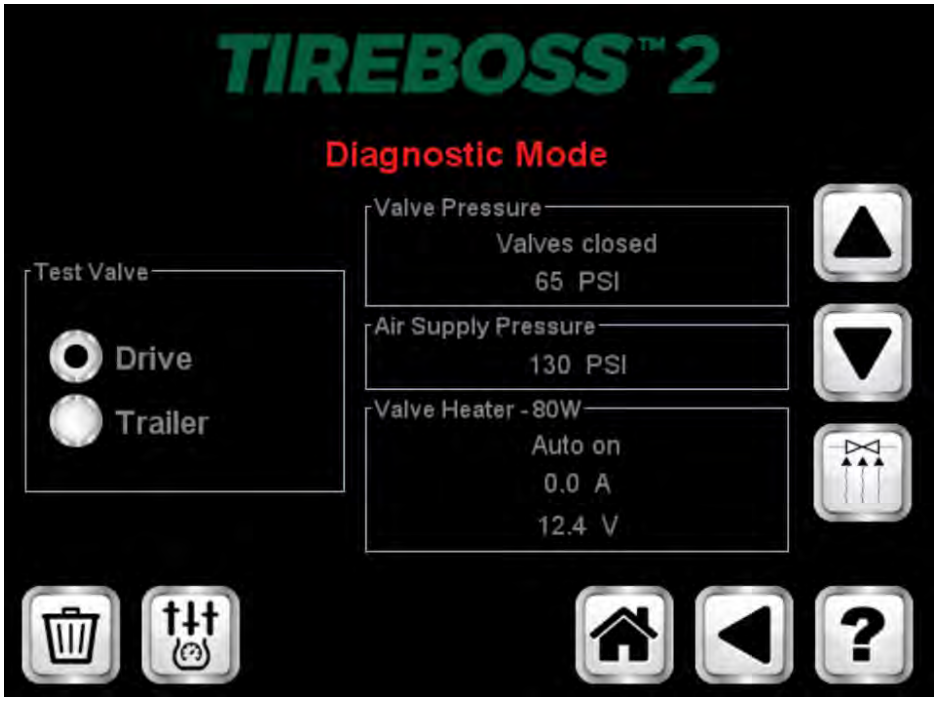

SECTION 4

SYSTEM PROGRAMMING & UPDATES

Identifying Software Packages: Stable Release

TIREBOSS releases new and updated software packages for your TIREBOSS unit to enhance existing features, improve user experience, and to ensure the reliability of the tire pressure control system.

To check the software package currently on your system, go to the System Info screen:

1. *On the Home screen click on the System Setup icon.*
2. *Select the System Status icon.*
3. *Click on the Information icon.*





After you have reached the screen shown above, refer to the table on the next page to determine the software package currently present on your system.

NOTE:

- *Display O/S Software Version 1.11 means the system is pre-SR 12.*
- *Display O/S Software Version 2.00 means the system is at SR 12.00.*
- *Starting at SR 12.02.00, the firmware package is displayed on the System Info screen.*
- *SR 5 to SR 8 also have Display O/S Version 1.11, but have older versions of Display User Interface and System Controller, and cannot be upgraded via WiFi.*

SR PACKAGE	DISPLAY UNIT (SR11 ONLY)	DISPLAY USER INTERFACE	SYSTEM CONTROLLER	DISPLAY O/S
9		5.01.00	5.01.03	1.11
10		5.02.01	5.01.03	1.11
11	5.03.08		5.02.04	1.11

FIRMWARE PACKAGE (SR NUMBER)	DISPLAY MAIN BOARD (OCU POWER CONTROLLER)	DISPLAY UNIT (OCU GUI)	DISPLAY O/S (OCU BSP)	SYSTEM CONTROLLER (SCU MAIN)
12.00.00	2.02.00	5.04.08	2.00.00	5.03.03
12.02.00	2.02.00	5.04.10	2.02.00	5.03.03
13.00.00	2.02.00	5.04.12	2.02.03	5.04.02
13.00.03	2.02.00	5.04.12	2.03.02	5.04.02
14.00.02	2.02.00	6.00.05	2.03.04	5.05.02
15.00.02	2.02.00	6.00.05	2.03.04	5.06.02
15.01.02	2.02.00	6.01.02	2.03.04	5.07.02
16.00.07	2.03.00	6.02.06	2.04.06	5.08.03
16.01.00	2.03.00	6.02.06	2.04.06	5.08.04
17.00.02	2.03.00	6.03.02	2.05.00	6.00.11
17.01.00	2.03.00	6.04.00	2.05.00	6.01.02
17.02.00	2.03.00	6.04.01	2.05.00	6.02.03
17.03.00	2.04.00	6.04.01	2.06.00	6.02.03

Version Error vs. Configuration Error

Version and Configuration Errors are both caused by incompatible data between the OCU and SCU. The cause of the issue is different for each.

There are 2 different types of firmware related items on both the OCU & SCU:

1. *Stable Release firmware – The Stable Release (SR) package contains firmware for both the OCU and SCU. We send the data to the OCU first, then once we boot up the system it sends the data to the SCU. This data will be the same on all units running that version of SR (e.g. SR 17.02.00).*

2. *Configuration data – Each vehicle has its own unique configuration data that is tailored to that vehicle & application. This will include the system serial number, component serial numbers, number of valves and the pressure charts for that vehicle/application. This data will be different for every vehicle.*

Version Errors:
When the system is starting up the OCU and SCU will confirm they are running the same firmware. A version error will occur when the OCU notices that the SCU is running a different firmware version meaning the two devices are incompatible. (e.g. SR17.02.00 OCU cannot operate with a SR14 SCU)

A version error will be present if an OCU or SCU has been swapped with components from a different vehicle that does not have the same firmware.

To fix the version error a new update file must be sent to the system so the OCU can send the update to the SCU. Even if the OCU is running sr17.02.00, the file must be sent again.

A version error must be resolved before a configuration error as the Config issue may be resolved when fixing the version error. Also note that a COM Error would need to be corrected before any of these other Errors.

Configuration Errors:
Configuration data is the operating instructions for how the system will operate. It controls the number of valves, pressure settings and stores all component data. A "Config Error" code will appear if the data sets do not match.

The OCU and SCU each carry the complete set of configuration data so if one of the components is replaced the data can be transferred from the remaining device. The issue with this is that if you want to test a spare OCU to see if the original OCU is at

fault you must transfer all the data from the SCU to the replacement OCU. If original OCU was OK (not the fault), it can be re-installed and will match the same SCU. Really need to be careful with the loaner when installing in another vehicle, as it now contains the info from the vehicle it was installed in for the test, and then when installed in another vehicle, that info will be downloaded to the SCU of the new vehicle, and you would have 2 vehicles with the same SSN (see item 4 below).

When sending a new configuration file it can raise 2 different issues:

1. *"Config Error" – if the configuration data does not match*

2. *"System Installed Incorrectly" – if the install data does not match (a new sd card will cause this error).*

These errors can be resolved by matching the data sets between the OCU and SCU.

1. *If the OCU is replaced with a new unit that hasn't been initialized for the vehicle, the configuration and install data can be uploaded from the original SCU (green up arrow on info screen).*

2. *If the SCU is replaced with a new unit, the data can be downloaded from the original OCU (green down arrow on info screen).*

3. *If the OCU and SCU are configured for the same vehicle (SSN matching) the data can be transferred in either direction. Take note of which direction to transfer data when changing each one separately.*

4. *If the OCU and SCU are configured for different vehicles (SSN not matching) the only option is to force the SCU to match the OCU by clearing the SCU flash (on OCU diagnostic screen). The OCU will automatically reload the SCU with the data from OCU.*

Field Replacement of OCU or SD Card

The following steps outline the process required to replace an OCU or SD Card in a previously installed and functioning system.

1. *Ensure the system is powered off and the system main fuse is removed prior to beginning replacment.*

2. *Remove the faulty OCU or SD Card and install the replacement unit in its place. Re-install the system main fuse and power on the system*

3. *When the system powers up, there will be an alert: "System Installed Incorrectly". Install the correct configuration by retrieving the install information from the SCU using the following process.*



4. *From the **Main Screen**, select the gear icon in the top left corner of the screen to access the **Initial Menu** Screen.*



5. *From the **Initial Menu** Screen, select the diagnostics icon to access the **System Status Screen**.*



6. *From the **System Status Screen**, Select the information icon to access the **System Information Screen**.*



7. *From here, press the green up arrow to load configuration data from the SCU onto the OCU*

Field Replacement of SCU

The following steps outline the process required to repace a SCU in a previously installed and functional system.

1. *Ensure the system is powered off and the system main fuse is removed prior to beginning replacment.*

2. *Remove the faulty SCU and install the replacement unit in its place. Re-install the system main fuse and power on the system*

3. *When the system powers up, install the correct configuration by retrieving the install information from the OCU using the following process.*



4. *From the **Main Screen**, select the gear icon in the top left corner of the screen to access the **Initial Menu** Screen.*



5. *From the **Initial Menu** Screen, select the diagnostics icon to access the **System Status Screen**.*



6. *From the **System Status Screen**, Select the information icon to access the **System Information Screen**.*



7. *From here, press the green down arrow to load configuration data from the OCU onto the SCU*

NOTE: For both procedures above, there will also be a "Config Error" alert. Clear the "System Installed Incorrectly" alert first and then clear the "Config Error". *See Pg 4-6*

Configuration Download

This can also be used to clear "Config Error" alert when replacing an OCU.

1. *To download a configuration, navigate to the configuration download screen by pressing the following icons on the OCU screen.*

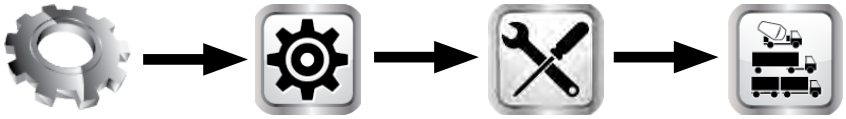

2. *For password, enter 15803 and then press the unlock button*



3. *Use the up and down arrrows to bring the desired configuration name in the middle of the screen. Contact TIREBOSS if you need to confirm which configuration to use. *Do NOT use files ending in BAK, or any numbers (001, 002, etc.)*

4. *Press and hold the enter button for 3 seconds.*



5. *The screen should say "Change in Progress" and the button will be dimmed/greyed out. When the download is complete "Change Suceeded" will be displayed and the button should not be dimmed/greyed out. You may now return to the homescreen.*

Field Replacement of both OCU & SCU

In some situations both the OCU and SCU need to be replaced concurrently. In these situations, consultation with TPC International service technicians must be performed ahead of time to ensure that the components can be correctly programmed prior to being shipped out. Once they arrive, the following process can be used to install the components;

1. *Ensure the system is powered off and the systems main fuse is removed prior to being replaced.*
2. *Remove the faulty OCU and install the replacement unit in its place.*
3. *Remove the faulty SCU and install the replacement unit in its place.*
4. *Re-install the system main fuse and power on the system*
5. *Once the system powers up it should be functional with no alarms present. If alarms are visible contact TPC International for further diagnostic assitance.*

Firmware/ Software Updates

The following steps describe the process that must be followed in order to update either the Firmware or Software Version of your TIREBOSS 2 System.

1. *Verify that you are in a location where a reliable WiFi network can be accessed.*
2. *Connect your OCU to this network [If unaware of how do this, refer to* ***Connecting OCU to WiFi*** *on Page 3-6]*
3. *With a network connection established, contact TPC International Service department for required updates to be installed.*

SECTION 5

TROUBLE SHOOTING GUIDE

WIRING PIN OUT
CABLE 1000-120

OCU POWER CABLE

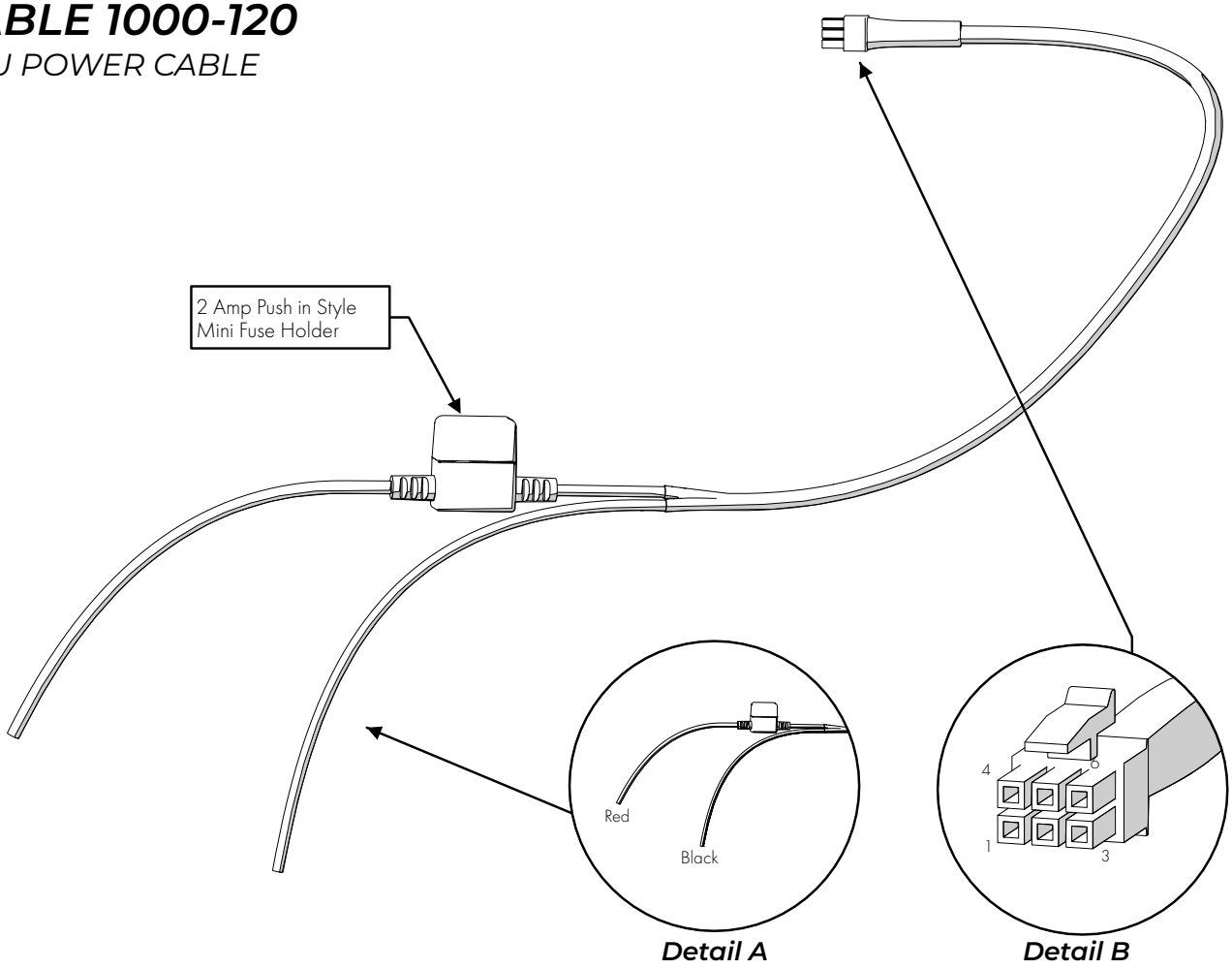

Detail A - Battery Hook-Up

Red Wire - 22 AWG | Red | Switched Power [+]
Black Wire - 22 AWG | Black | Ground [-]

Detail B - Black, 6 Pin, OCU Connector

Pin 1 - 22 AWG | Black | Ground [-]
Pin 2 - N/A
Pin 3 - 22 AWG | Red | Switched Power [+]
Pin 4 - N/A
Pin 5 - N/A
Pin 6 - N/A

WIRING PINOUT
CABLE 1000-400

SCU SYSTEM POWER FOR SCU-V1

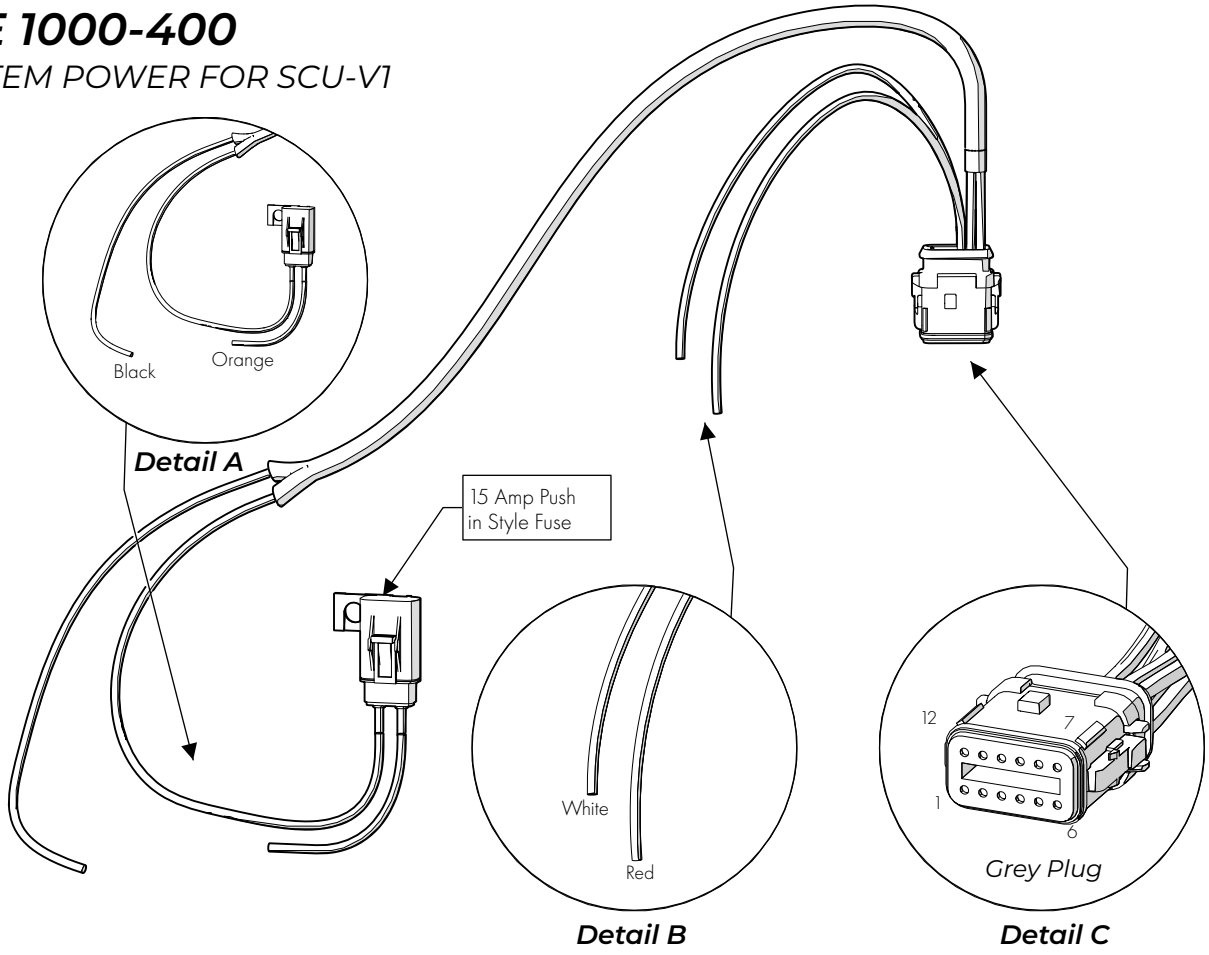

Detail A - Battery Hookup

Orange Wire - 14 AWG | Battery [+]
Black Wire - 14 AWG | Ground [-]

Detail B - Electric Load Sense

Red Wire - 14 AWG
White Wire - 14 AWG

Detail C - Grey, 12 Pin, Deutsch Connector

Pin 1 - N/A
Pin 2 - N/A
Pin 3 - 14 AWG | White | Electric Load Sense
Pin 4 - N/A
Pin 5 - 14 AWG | Red | Battery [+]
Pin 6 - 14 AWG | White | Battery [+]
Pin 7 - 14 AWG | Black | Ground [-]
Pin 8 - 14 AWG | Green | Ground [-]
Pin 9 - 14 AWG | Red | Electric Load Sense
Pin 10 - N/A
Pin 11 - N/A
Pin 12 - N/A

Note:

Check battery voltage between pins 5&8 and 6&7 only

5&6 are both connected to orange (+) wire

7&8 are both connected to black (-) wire

WIRING PINOUT
CABLE 1000-400-V2

SCU SYSTEM POWER FOR SCU-V2

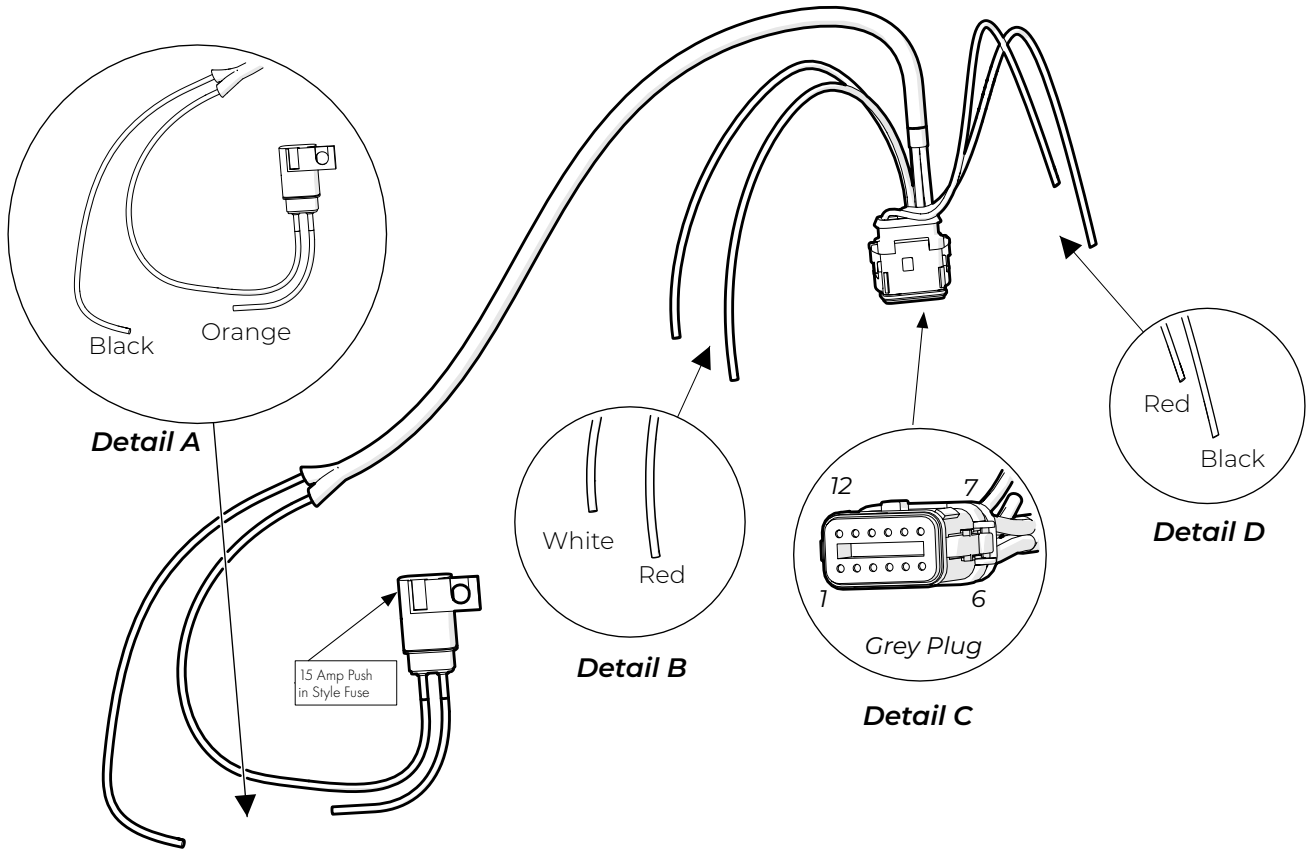

Detail A - Battery Hookup

Orange Wire - 14 AWG | Battery [+]
Black Wire - 14 AWG | Ground [-]

Detail B - Electric Load Sense

Red Wire - 14 AWG
White Wire - 14 AWG

Detail D - Electric Auto-Drain

Red Wire - 14 AWG
Black Wire - 14 AWG

Detail C - Grey, 12 Pin, Deutsch Connector

Pin 1 - N/A
Pin 2 - N/A
Pin 3 - 14 AWG | White | Electric Load Sense
Pin 4 - N/A
Pin 5 - 14 AWG | Red | Battery [+]
Pin 6 - 14 AWG | White | Battery [+]
Pin 7 - 14 AWG | Black | Ground [-]
Pin 8 - 14 AWG | Green | Ground [-]
Pin 9 - 14 AWG | Red | Electric Load Sense
Pin 10 - 14 AWG | Black | Ground for Auto-Drain
Pin 11 - N/A
Pin 12 - 14 AWG | Red | Switched Battery Output for Auto-Drain

Note:

Check battery voltage between pins 5&8 and 6&7 only

5&6 are both connected to orange (+) wire

7&8 are both connected to black (-) wire

WIRING PINOUT
CABLE 1000-440

VCU - VCU I/F CABLE

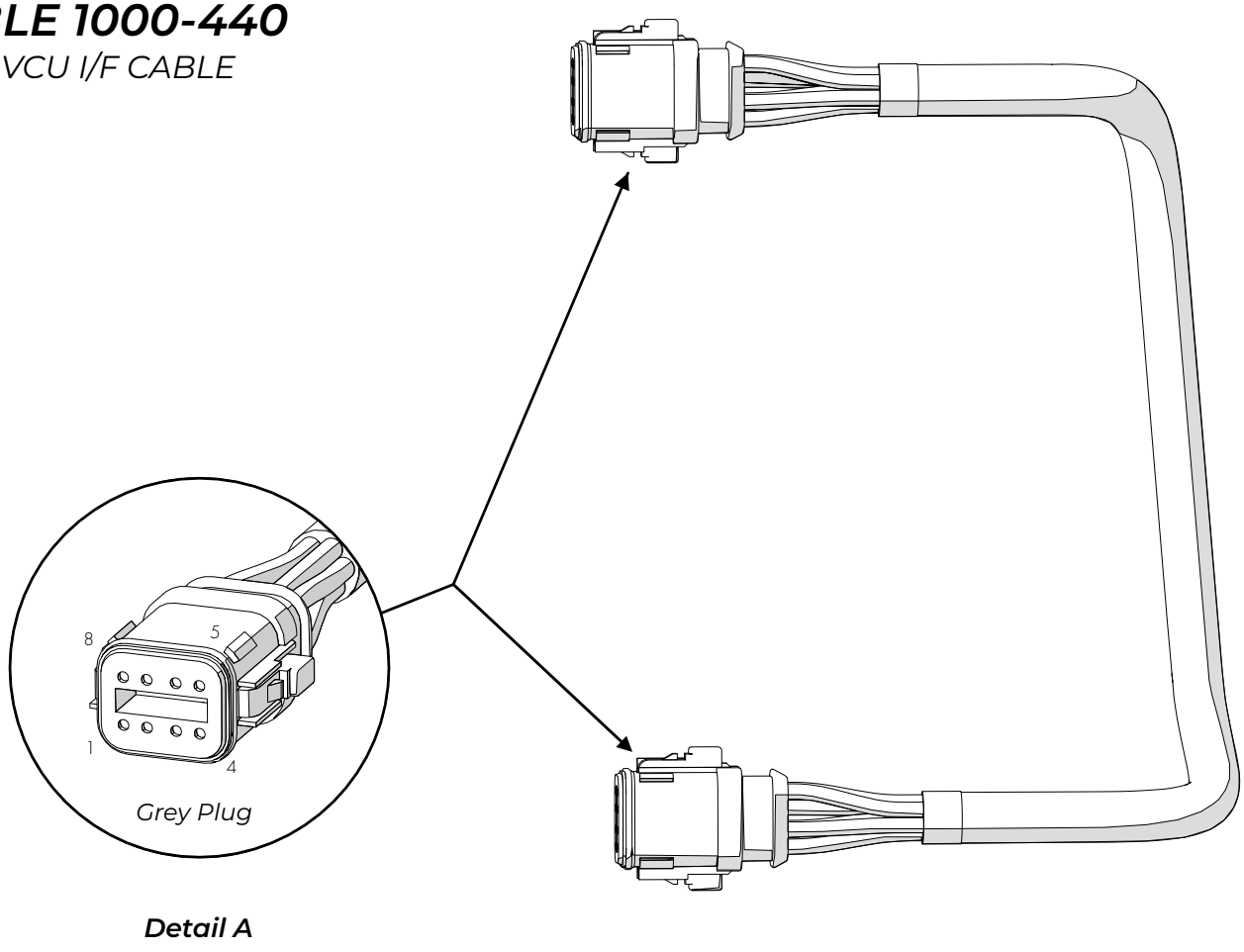

Detail A

Detail A - Grey, 8 Pin, Deutsch Connector

Pin 1 - 14 AWG | White | Heater [+]
Pin 2 - 14 AWG | Black | Heater [-]
Pin 3 - 14 AWG | Yellow | LIN BUS
Pin 4 - 16 AWG | Orange | Battery Power [+]
Pin 5 - 16 AWG | Black | Ground [-]
Pin 6 - N/A
Pin 7 - 14 AWG | Green | Heater [-]
Pin 8 - 14 AWG | Blue | Heater [+]

Note:

Battery voltage between pins 1&2, 4&5 and 7&8

0v. - 12v. signal on Pin 3 [Ground to chassis]

WIRING PINOUT
CABLE 1000-420

SYSTEM I/F CABLE
FOR SCU-V1 AND SCU V2

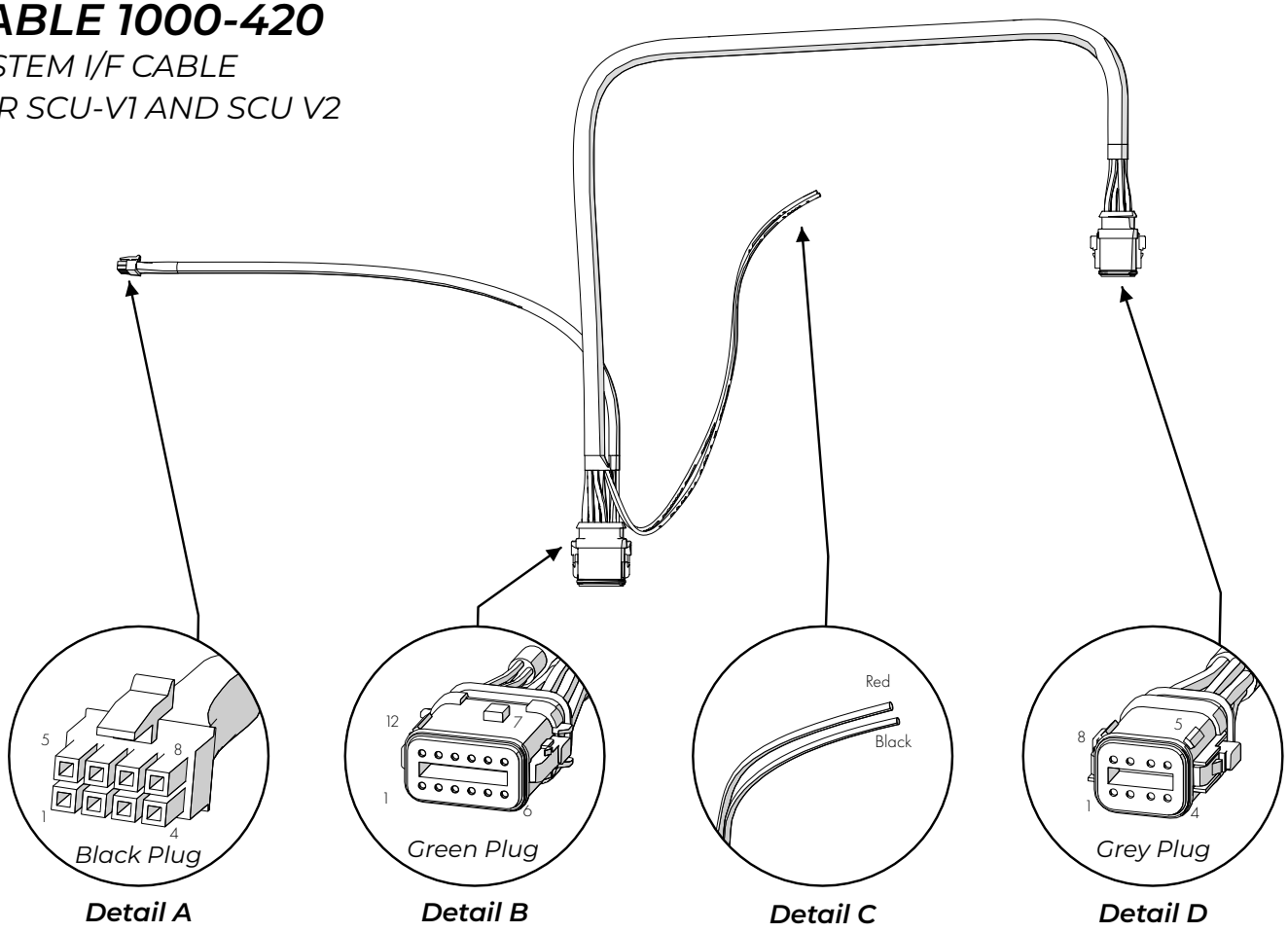

Detail A - Black, 8 Pin, OCU Connector

Pin 1 - 18 AWG | Black | OCU RX [-] | Green Plug Pin 2] Pair
Pin 2 - 18 AWG | White | OCU RX [+] | Green Plug Pin 11]
Pin 3 - 18 AWG | Black | OCU TX [-] | Green Plug Pin 12] Pair
Pin 4 - 18 AWG | Red | OCU TX [+] | Green Plug Pin 1]

Note:

Wires from pins 1 & 2, and pins 3 & 4 are twisted pairs
0v. - 5v. signal between pins 1 & 2
0v. - 5v. signal between pins 3 & 4

Detail B - Green, 12 Pin, Deutsch Connector

Pin 1 - 18 AWG | Red | OCU RX [+] | Black Plug Pin 4
Pin 2 - 18 AWG | Black | OCU TX [-] | Black Plug Pin 1
Pin 3 - 16 AWG | Yellow | Lin | Grey Plug Pin 3
Pin 4 - 16 AWG | Orange | SCU 12V [+] | Grey Plug Pin 4
Pin 5 - 16 AWG | White | Heater [+] | Grey Plug Pin 1
Pin 6 - 16 AWG | Blue | Heater [+] | Grey Plug Pin 8
Pin 7 - 14 AWG | Black | Heater [-] | Grey Plug Pin 2
Pin 8 - 14 AWG | Green | Heater [- | Grey Plug Pin 7
Pin 9 - 16 AWG | Black | SCU Ground [-] | Grey Plug Pin 5
Pin 10 - 18 AWG | Red | Remote Alarm [+]
Pin 11 - 18 AWG | White | OCU TX [+] | Black Plug Pin 2
Pin 12 - 18 AWG | Black | OCU RX [-] | Black Plug Pin 3

Detail C - Remote Alarm Hookup

Red Wire - 18 AWG | Remote Alarm [+]
Black Wire - 18 AWG | Remote Alarm [-]

Detail D - Grey, 8 Pin, Deutsch Connector

Pin 1 - 14 AWG | White | Heater [+] | Green Plug Pin 5
Pin 2 - 14 AWG | Black | Heater [-] | Green Plug Pin 7
Pin 3 - 16 AWG | Yellow | LIN BUS | Green Plug Pin 3
Pin 4 - 16 AWG | Orange | SCU 12V [+] | Green Plug Pin 4
Pin 5 - 16 AWG | Black | SCU Ground [-] | Green Plug Pin 9
Pin 6 - N/A
Pin 7 - 14 AWG | Green | Heater [-] | Green Plug Pin 8
Pin 8 - 14 AWG | Blue | Heater [+] | Green Plug Pin 6

Note:

- *Battery voltage always present between pins 1 & 2 and 7 & 8*
- *12 V (not battery voltage) only avaialble between pins 4 and 5 only when SCU is in full power mode*
- *0v. - 12v. signal on Pin 3 [Ground to chassis]*

CABLE 1000-225

SCU-V2 CABLE - EXTERNAL TRANSDUCERS ONLY

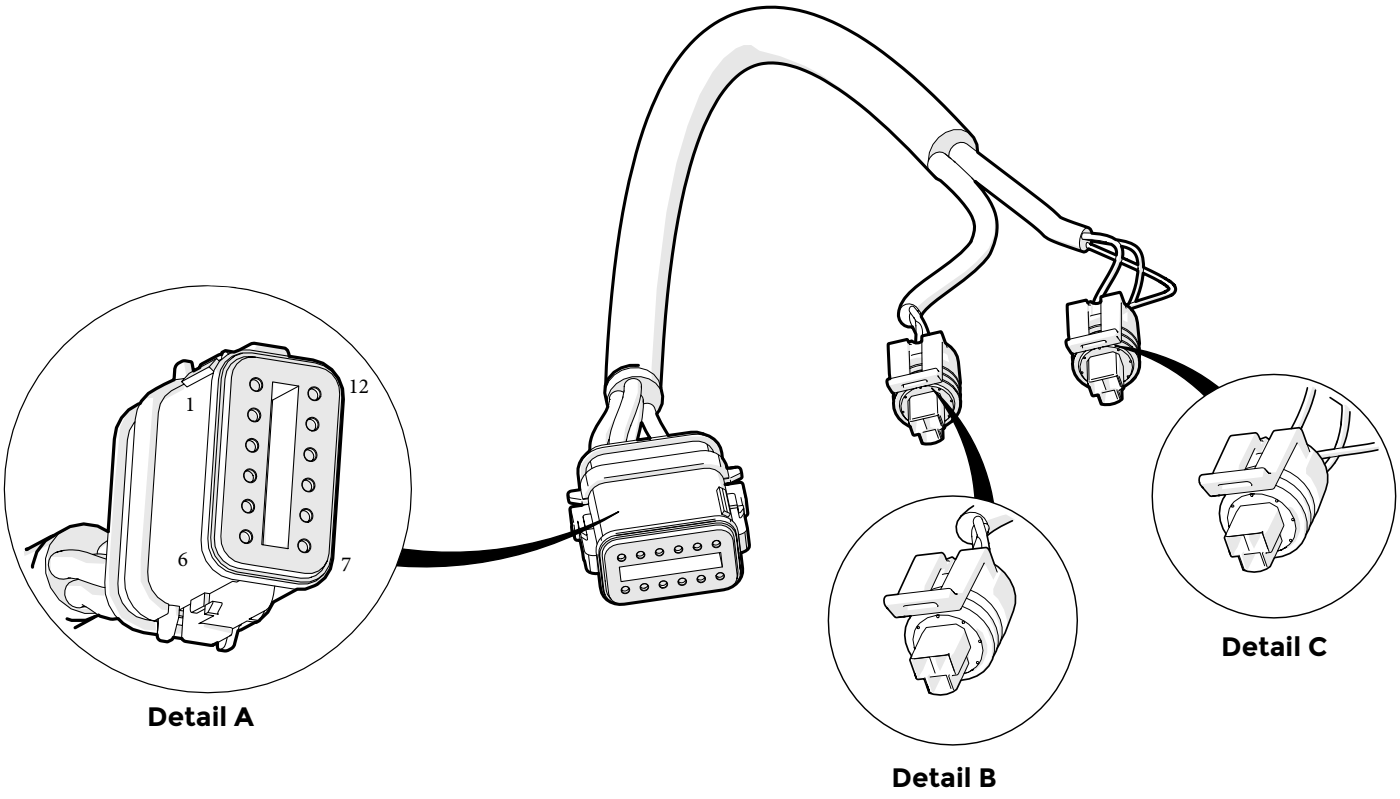

Detail A
Beige, 12 Socket, SCU V2 Connector - Port D

1 - Jumper to Pin 12 [+12V] - Datalogger Enable Input
2 - 5V Transducer Power
3 - Ground
4 - Air Brake Transducer Input
5 - Unused
6 - Unused
7 - Unused
8 - Unused
9 - Suspension Transducer Input
10 - Ground
11 - Unused Ground
12 - Jumper to Pin 1 [+12V] - Battery Reference Output

Detail B
3 Socket, Wet Tank Pressure Transducer

Blue - 5V Transducer Power
Brown - Ground
White - Air Brake Transducer Input

Detail C
3 Socket, Suspension Pressure Transducer

Red - 5V Transducer Power
Black - Ground
Green - Suspension Transducer Input

CABLE 1000-495

SCU-V2 DATA LOGGER INTERFACE CABLE WITH EXTERNAL TRANSDUCERS

Starts with SSN 02944 and up
Will NOT work with SCU V1

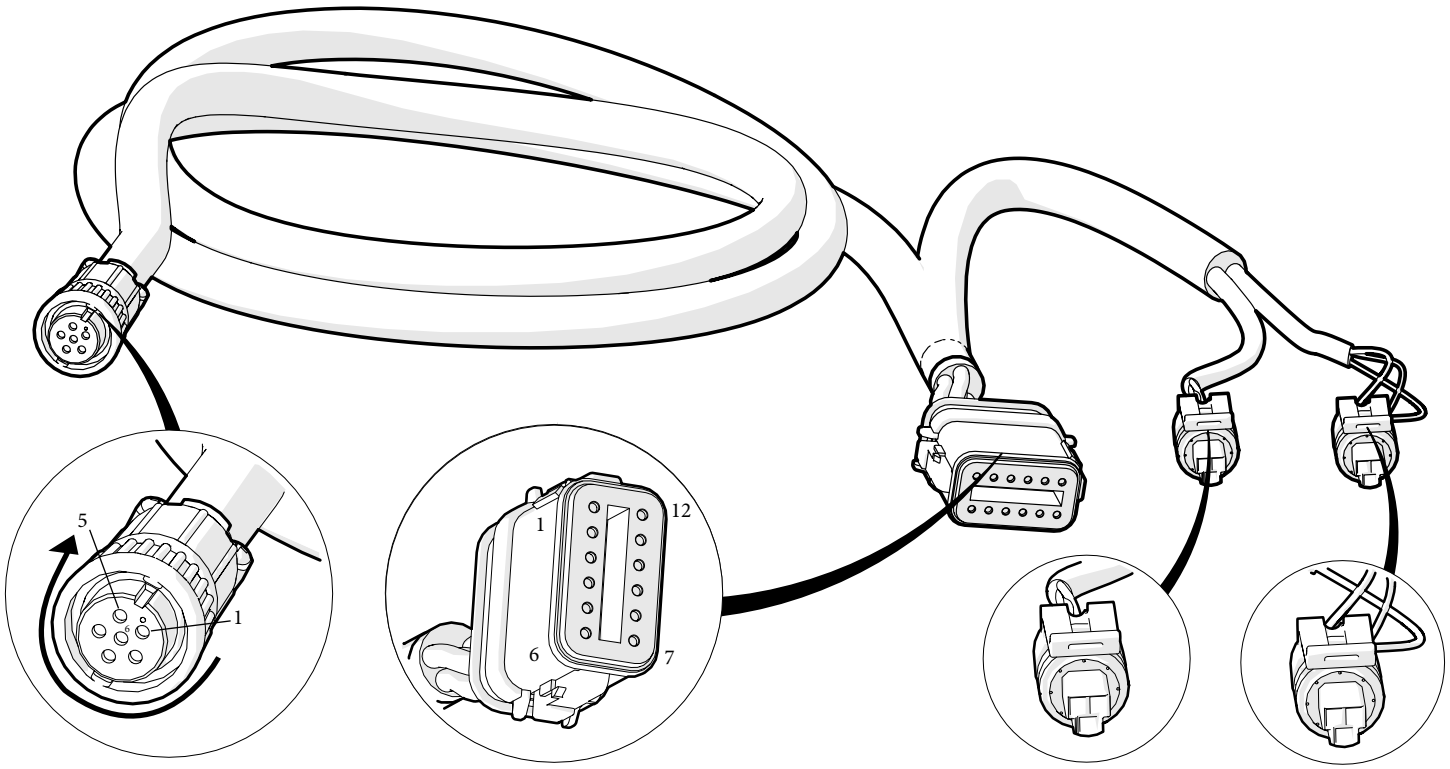

Detail A **Detail B** **Detail C** **Detail D**

Detail A
6 Socket, Switchcrraft Connector

1 - White - Port D7 - RXD
2 - Blue - Port D6 - TXD
3 - Brown - Port D8 - CTS
4 - Green - Port D5 - RTS
5 - Orange - Port D11 - Ground
6 - N/A

Detail B
Beige, 12 Socket, SCU V2 Connector - Port D

1 - Jumper to Pin 12 [+12V] - Datalogger Enable Input
2 - 5V Transducer Power
3 - Ground
4 - Air Brake Transducer Input
5 - RTS
6 - TXD
7 - RXS
8 - CTS
9 - Suspension Transducer Input
10 - Ground
11 - Ground
12 - Jumper to Pin 1 [+12V] - Battery Reference Output

Detail C
3 Socket, Wet Tank Pressure Transducer

Blue - 5V Transducer Power
Brown - Ground
White - Air Brake Transducer Input

Detail D
3 Socket, Suspension Pressure Transducer

Red - 5V Transducer Power
Black - Ground
Green - Suspension Transducer Input

Note:
- TXD & RTS = TIREBOSS to Datalogger
- RXD & CTS = Datalogger to TIREBOSS

CABLE 1000-496

SCU-V1 TO SCU-V2 DATALOGGER ADAPTER

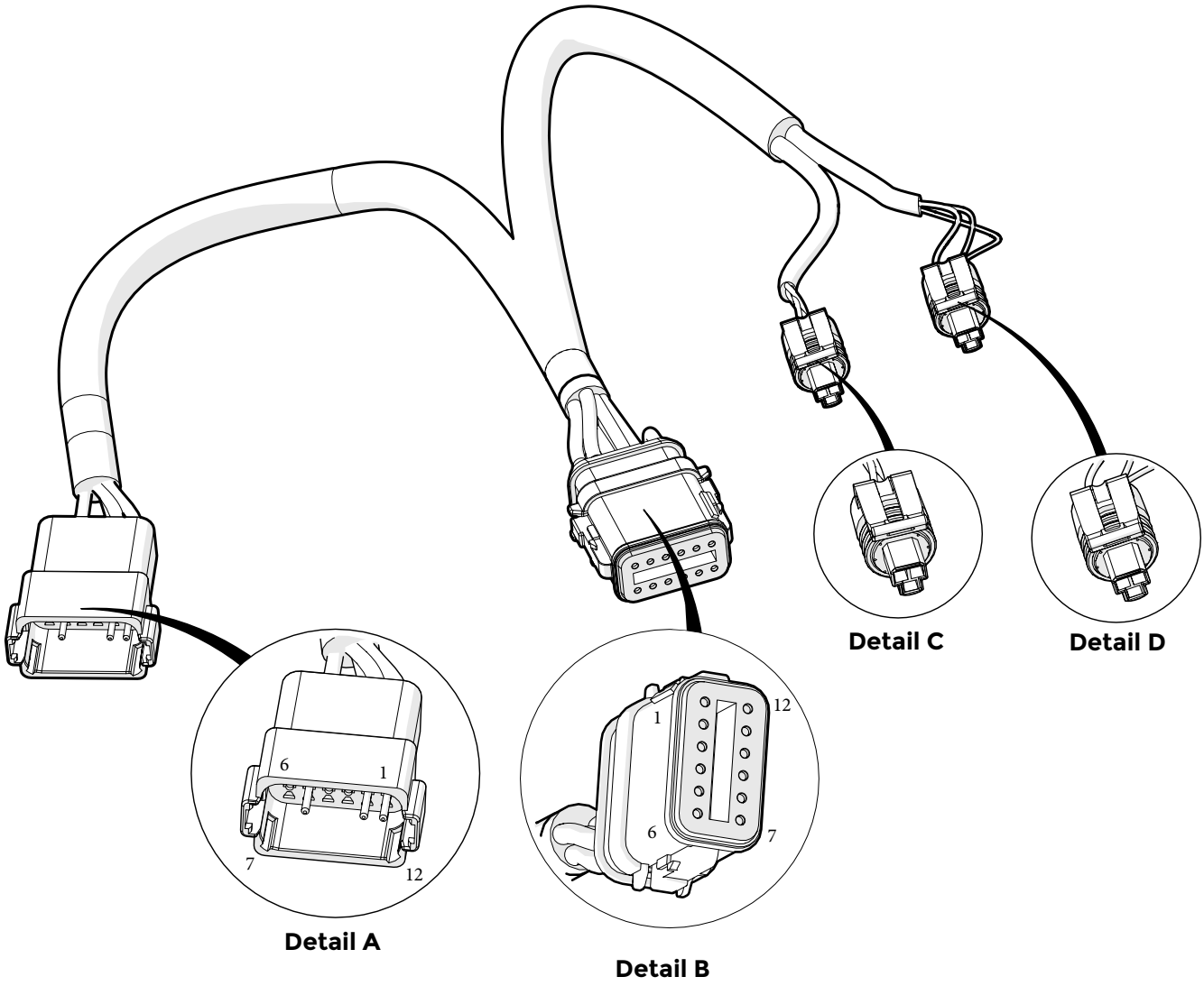

Detail A
To Datalogger

7 - White - Port D7 - RXD
6 - Blue - Port D6 - TXD
8 - Brown - Port D8 - CTS
5 - Green - Port D5 - RTS
11 - Orange - Port D11 - Ground

Detail B
Beige, 12 Socket, SCU V2 Connector - Port D

1 - Jumper to Pin 12 [+12V] - Datalogger Enable Input
2 - 5V Transducer Power
3 - Ground
4 - Air Brake Transducer Input
5 - RTS
6 - TXD
7 - RXS
8 - CTS
9 - Suspension Transducer Input
10 - Ground
11 - Ground
12 - Jumper to Pin 1 [+12V] - Battery Reference Output

Detail C
3 Socket, Wet Tank Pressure Transducer

Blue - 5V Transducer Power
Brown - Ground
White - Air Brake Transducer Input

Detail D
3 Socket, Suspension Pressure Transducer

Red - 5V Transducer Power
Black - Ground
Green - Suspension Transducer Input

Note:
- TXD & RTS = TIREBOSS to Datalogger
- RXD & CTS = Datalogger to TIREBOSS

CONNECTOR PINOUT
CABLE 1000-420

SCU-V1 to VCU-1 & OCU - I/F CABLE

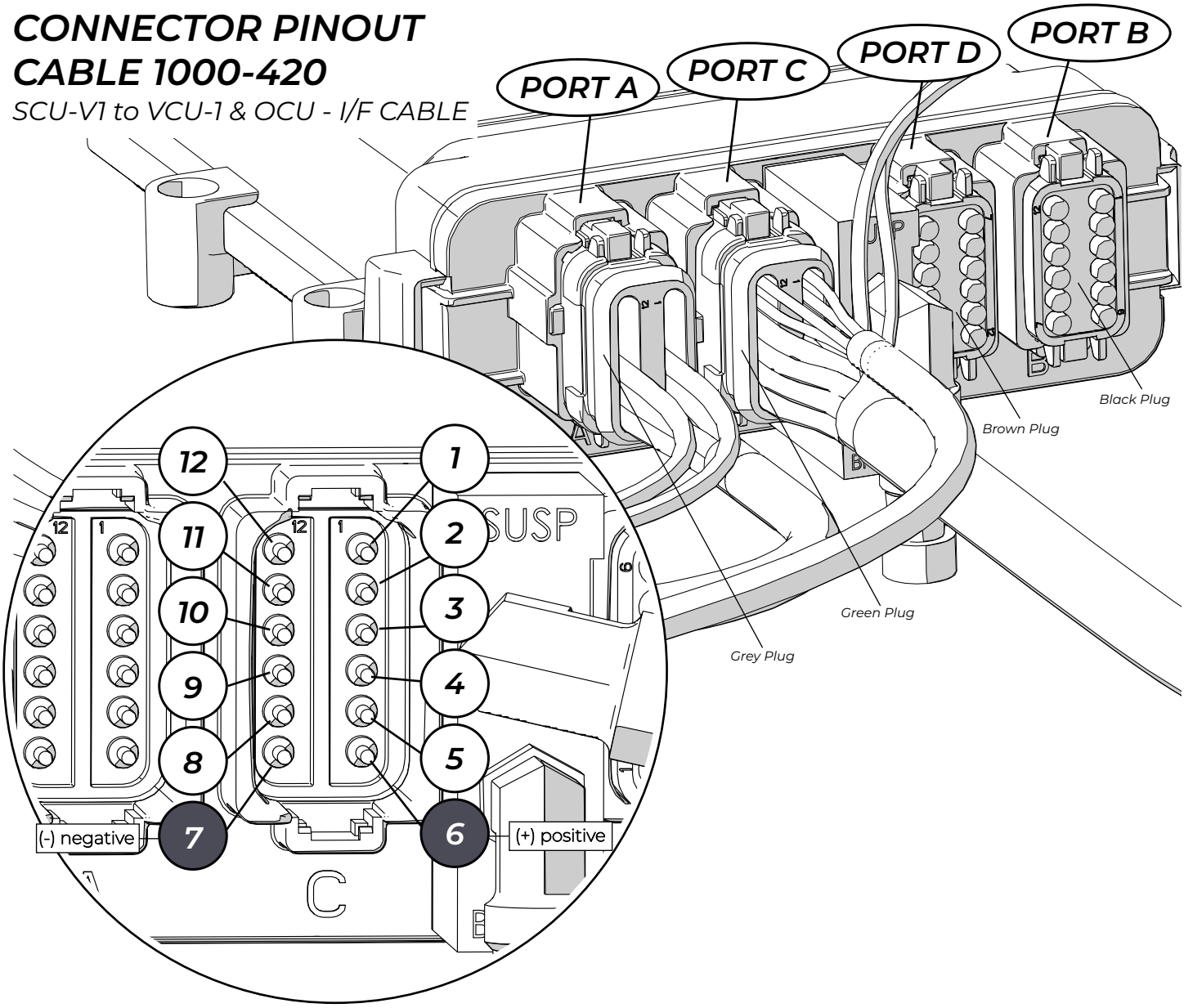

PORT C on SCU HOUSING - 12 Pin

Pin 1 - 20 AWG | Red | OCU RX [+]
Pin 2 - 20 AWG | Black | OCU TX [-]
Pin 3 - 14 AWG | Yellow | Lin
Pin 4 - 14 AWG | Orange | Battery Power [+]
Pin 5 - 16 AWG | White | Heater [+]
Pin 6 - 16 AWG | Blue | Heater [+]
Pin 7 - 14 AWG | Black | Heater [-]
Pin 8 - 14 AWG | Green | Heater [-]
Pin 9 - 14 AWG | Black | Ground [-]
Pin 10 - 18 AWG | Red | Remote Alarm [+]
Pin 11 - 20 AWG | White | OCU TX [+]
Pin 12 - 20 AWG | White | OCU RX [-]

Note:

0v. - 5v. signal between pins 1&12

0v. - 5v. signal between pins 2&11

0v. - 12v. signal on Pin 3 [Ground to chassis]

Battery voltage between pins 4&9, 5&8 and 6&7

Power between 4&9 is dependent on power command coming from OCU. May not be present if 1002 Comm Error.

CONNECTOR PINOUT
CABLE 1000-420-V2

SCU-V2 to VCU-1 & OCU - I/F CABLE

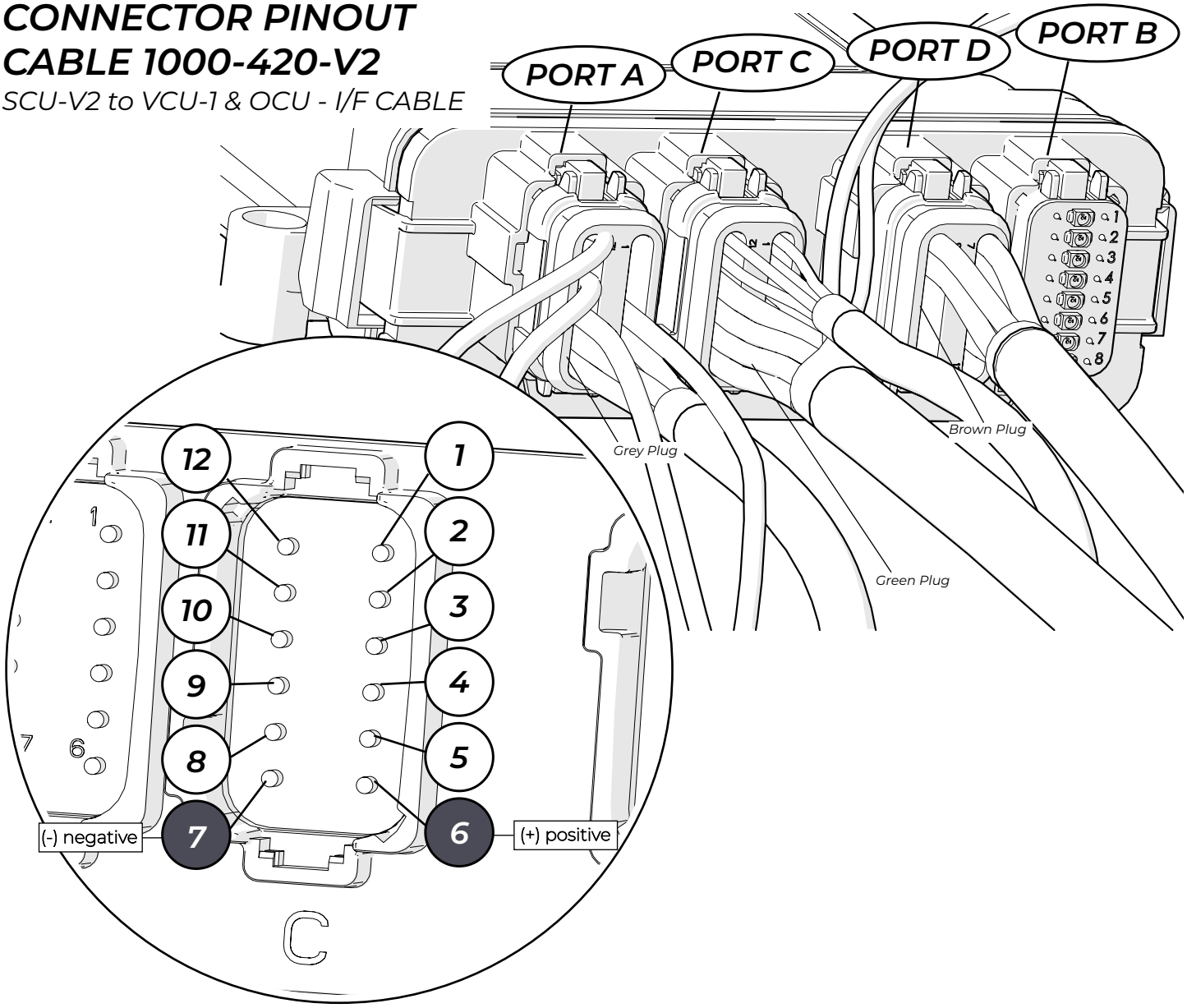

PORT C on SCU HOUSING - 12 Pin

Pin 1 - 20 AWG | Red | OCU RX [+]
Pin 2 - 20 AWG | Black | OCU TX [-]
Pin 3 - 14 AWG | Yellow | Lin
Pin 4 - 14 AWG | Orange | Battery Power [+]
Pin 5 - 16 AWG | White | Heater [+]
Pin 6 - 16 AWG | Blue | Heater [+]
Pin 7 - 14 AWG | Black | Heater [-]
Pin 8 - 14 AWG | Green | Heater [-]
Pin 9 - 14 AWG | Black | Ground [-]
Pin 10 - 18 AWG | Red | Remote Alarm [+]
Pin 11 - 20 AWG | White | OCU TX [+]
Pin 12 - 20 AWG | White | OCU RX [-]

Note:

0v. - 5v. signal between pins 1&12

0v. - 5v. signal between pins 2&11

0v. - 12v. signal on Pin 3 [Ground to chassis]

Battery voltage between pins 4&9, 5&8 and 6&7

Power between 4&9 is dependent on power command coming from OCU. May not be present if 1002 Comm Error.

Power Flow Introduction

OCU Power Supply:

- *OCU receives ignition switched power at OCU Black Plug (6 pin connector). Pin 3 (red wire) is 12/24 V through a 2-amp fuse and Pin 1 (black wire) is ground.*

OCU/SCU Power Data Flow:

- *OCU sends data signal from Pins 3 (black wire) & 4 (red wire) of the OCU - Black Plug (8-pin) to Pins 12 (black wire) & 1 (red wire) of the SCU - Green Plug respectively – SCU wakes up.*
- *SCU sends data signal back to OCU via Pins 2 (black wire) & 11 (white wire) of the SCU - Green Plug to Pins 2 (white wire) & 1 (black wire) of the OCU - Black Plug (8-pin) respectively.*
- *OCU and SCU then have communication established and perform some verification of files.*
- *OCU - Black Plug (8-pin) only has data wires and no power.*
- *SCU receives battery power and ground continuously from main power supply on Grey Plug at Port A.*
- *SCU goes into low power mode when the system is not operational – OCU is off.*
- *SCU does not turn on/enter full power mode until a signal from the OCU is received.*
- *As long as the master switch is on, (+) power is available on Pins 5 & 6 (SCU – Grey Plug – Port A). These pins always have battery power even when the system is off.*
- *Pin 7 & 8 (SCU - Grey Plug – Port A) is (-) ground.*

NOTE: *5 & 6 are both connected to Orange (+) power wire from battery through a 15-amp fuse and 7 & 8 are both connected to Black (-) ground wire from battery. You should measure close to battery voltage. If not, there is a power connection, fuse or power cable problem.*

Power Flow testing requires the use of a multimeter with small and pointed probes to access various contact points.



Use caution when testing inside connection ports to prevent shorting between pins which can cause component damage.

Refer to the diagrams below for component location when performing power flow tests.

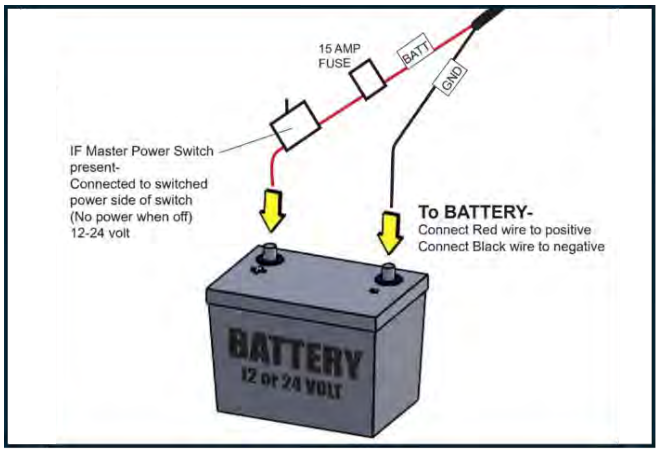

Diagram 1

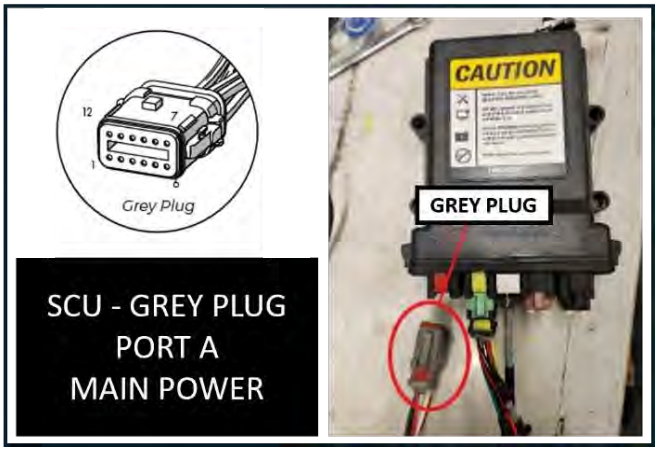

Diagram 2

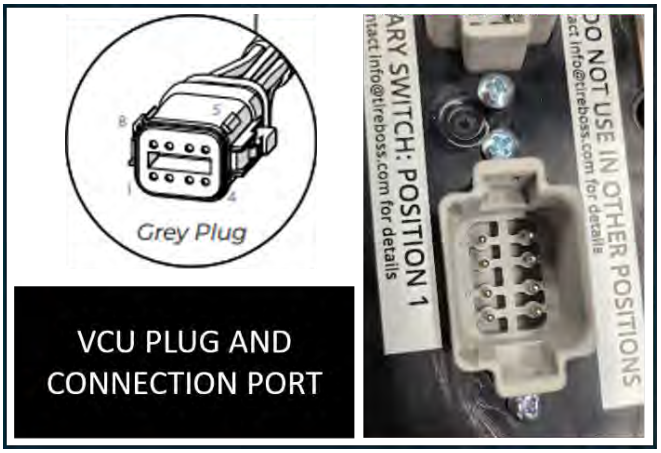

Diagram 3

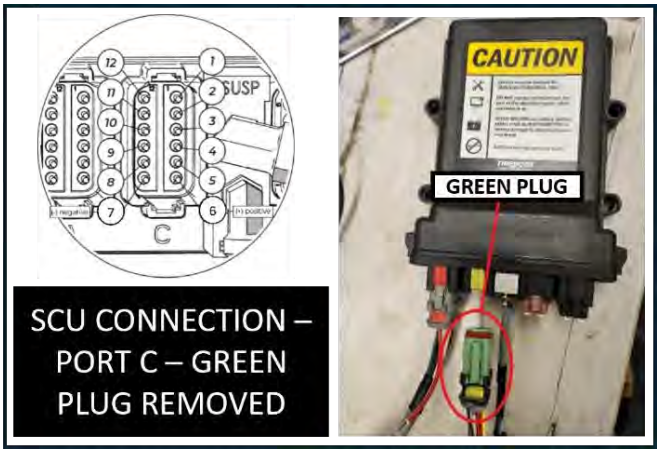

Diagram 4

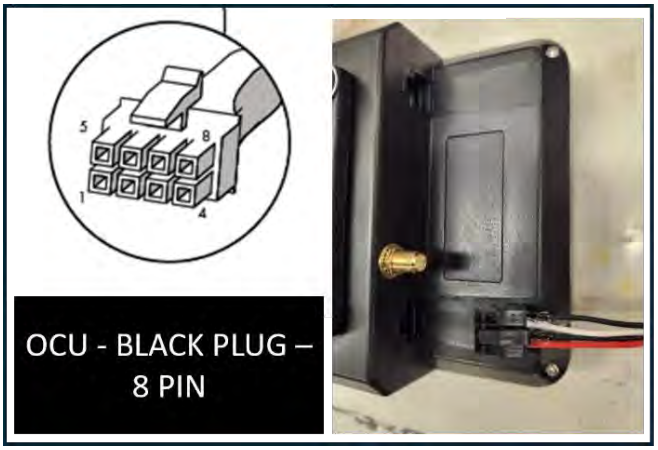

Diagram 5

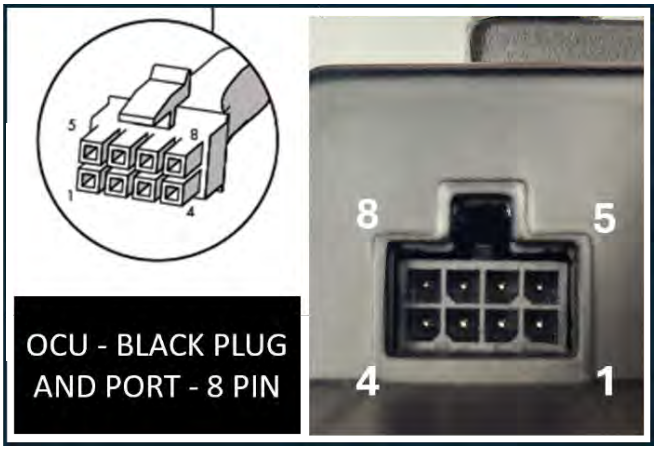

Diagram 6

Power Flow Testing

Perform Tests 1 and 2 with System shut off. When system starts again, SCU will be reset*

1. Test for battery power:

- *Test for 12/24 volts via 15-amp fuse (labeled Tireboss) connected at battery or truck power master switch (switched side)*

2. Test for battery power into SCU-Grey 12 Pin Plug removed at SCU - Port A:

- *Test for battery voltage between pins **5(+) / 8(-)***
- *Test for battery voltage between pins **6 (+) / 7 (-)***
  - *No power indicates faulty system power cable*
  - *Remove 15 amp fuse (test 1) and check for good connection in holder*

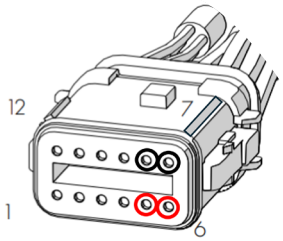

12 PIN GREY PLUG
MAIN POWER

Make sure system is running & on main screen before pulling plugs for the following tests as you are testing for communication between modules. Note that various alerts will show on OCU*

3. SCU pass through test – Grey 8 pin plug at VCU removed from first valve (Drives):

- *Test for battery voltage between pins **1 (+) / 2 (-)***
- *Test for battery voltage between pins **8 (+) / 7(-)***
- *Test for regulated 12V power from SCU between pins **4 (+) / 5 (-)***
  - *All power good indicates SCU & valve cable OK – Skip Test 4*
  - *1002 Comm error can result if no power to pins 4/5 with OCU and SCU on. Proceed with Test 4 to confirm if valve cable is faulty*

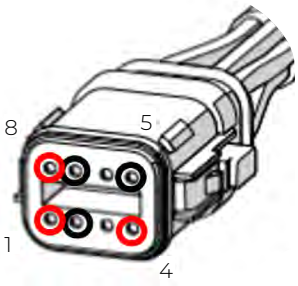

8 PIN GREY PLUG
VALVE

4. Test for power at SCU – Green 12 pin plug removed – Port C – check pins in SCU:

- *Test for battery voltage between pins **6 (+) / 7 (-)***
- *Test for battery voltage between pins **5 (+) / 8 (-)***

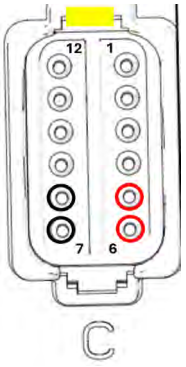

CAUTION – Take care not to short between Pins 5 or 6 (+) power and Pins 7 or 8 (-) ground. Battery voltage is present and may cause damage.

- *Test for regulated 12V power between pins **4 (12v+)** / **9 (-)***
  - *12V power here but not at valve cable end in test 3 indicates faulty valve cable*
  - *No power to pins 4/9 with OCU and SCU turned on indicates either SCU or main data cable may be faulty.*

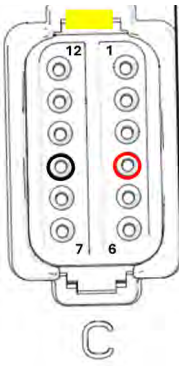

Note: The only way to check this is to first have the system in full power mode, then remove the Green Plug and immediately check for power on Pin 4. The SCU will stay in full power for a few minutes after initiated.

- ***If 1002 Comm Error, SCU will not go to Full Power Mode.***
- *Proceed with next tests to isolate problem*

5. Test for OCU cable sending/receiving data – SCU Green 12 pin plug removed:

a) *Test for 3.1V to 3.4V between pins **1 (+)** / **12 (-)***

- *If no voltage, proceed with Test 6 to test OCU output*

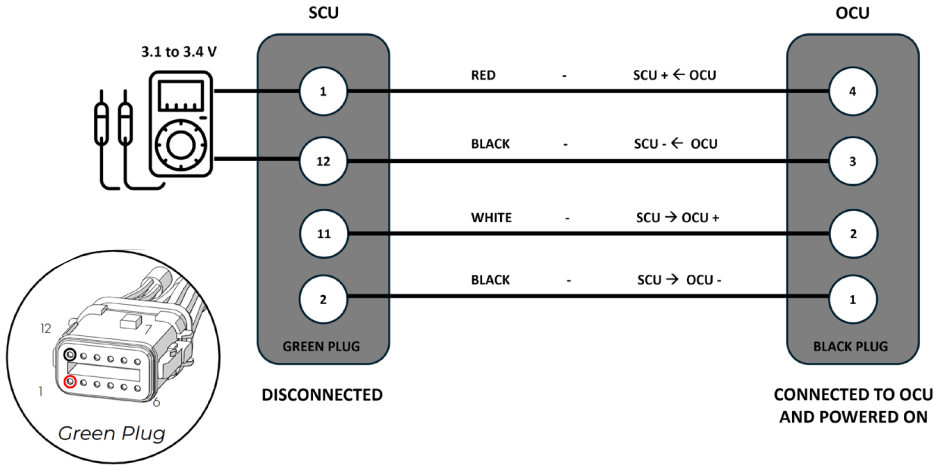

b) *Test for 0V to 0.2V between pins **11 (+)** / **2 (-)***

- *If greater than 0.2 V, proceed with Test 7 to test OCU*

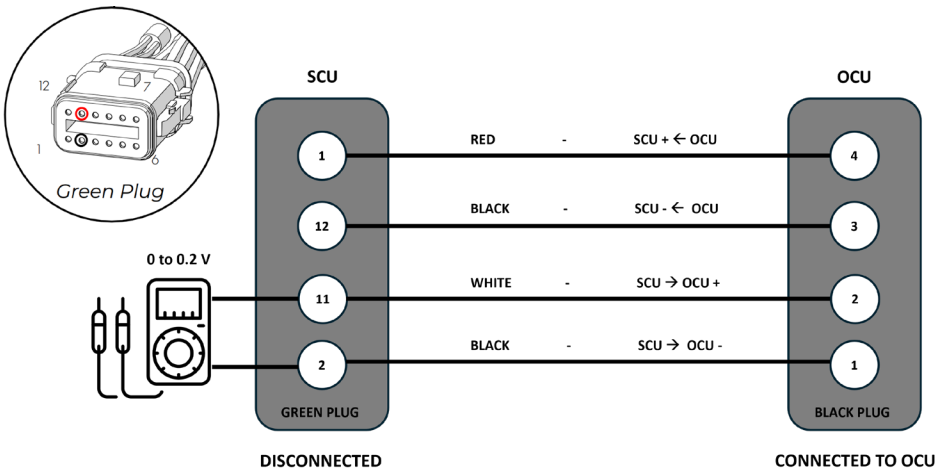

6. Test for OCU sending data – OCU 8 pin port with cable removed – check pins in OCU:



- *Test for 3.1V to 3.4V between pins **4 (+) / 3 (-)***
  - *No Voltage - Fault = OCU*
  - *Voltage here but not in Test 5 a) – Fault in Cable*

7. Test for OCU receiving data – OCU 8 pin port with cable removed – check pins in OCU:



- *Test for 0V to 0.2V between pins **2 (+) / 1(-)***
  - *If greater than 0.2V - Fault = OCU*
  - *Higher voltage here but not in Test 5 b) – Fault in Cable*

8. Test for SCU sending data – OCU 8 pin plug removed

- *Test for 3.1V to 3.4V between pins **2 (+) / 1 (-)***
  - *Steady Voltage indicates the SCU & Cable are OK*
  - *0V to 0.2V - Fault = SCU or System cable. Proceed with Test 9 to determine which is faulty*

NOTE: This test needs to start with both ends connected & SCU in full power mode (see test 4). As soon as the OCU reaches the main screen, the OCU starts sending data. Quickly unplug the Black Plug (8-pin) from the OCU (just after you see the main screen and before any errors are reported on the screen).

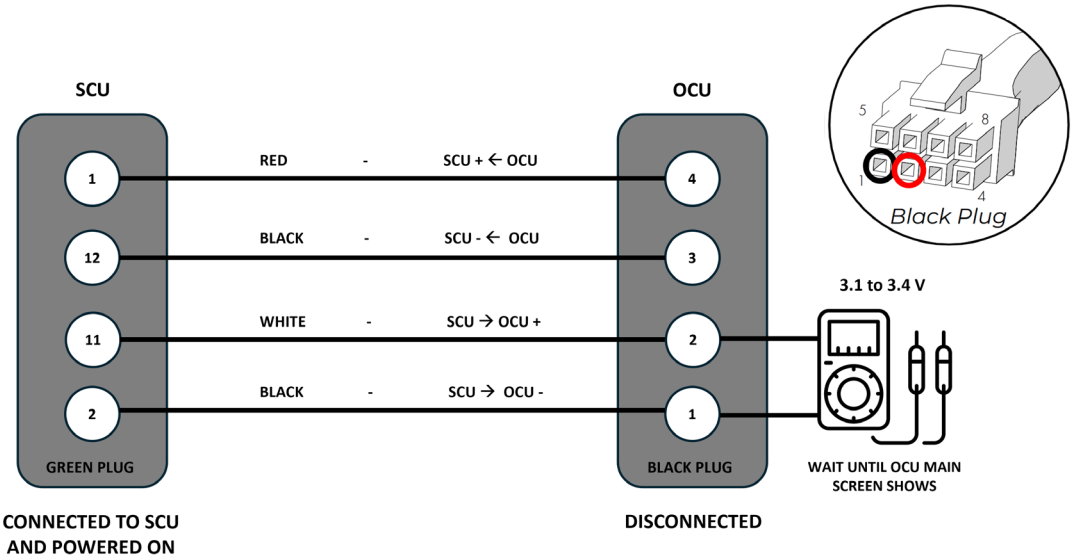

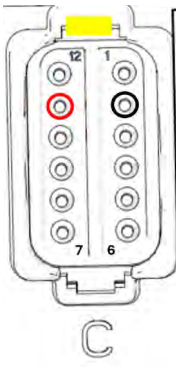

9. Test to determine if SCU or cable after test 8 – SCU Green 12 pin plug removed:

- *Test for 3.1V – 3.4V between pins **11 (+) / 2(-)** of SCU Connection Port C*
  - *Voltage present indicates SCU is OK & cable at fault*
  - *No Voltage - Fault = SCU*

10. Test for SCU receiving data – OCU 8 pin plug removed:

- Test for 0V – 0.2V between pins ***4 (+) / 3(-)***
  - Voltage greater than 0.2V = SCU fault
  - If within range, proceed with Test 11 to test SCU

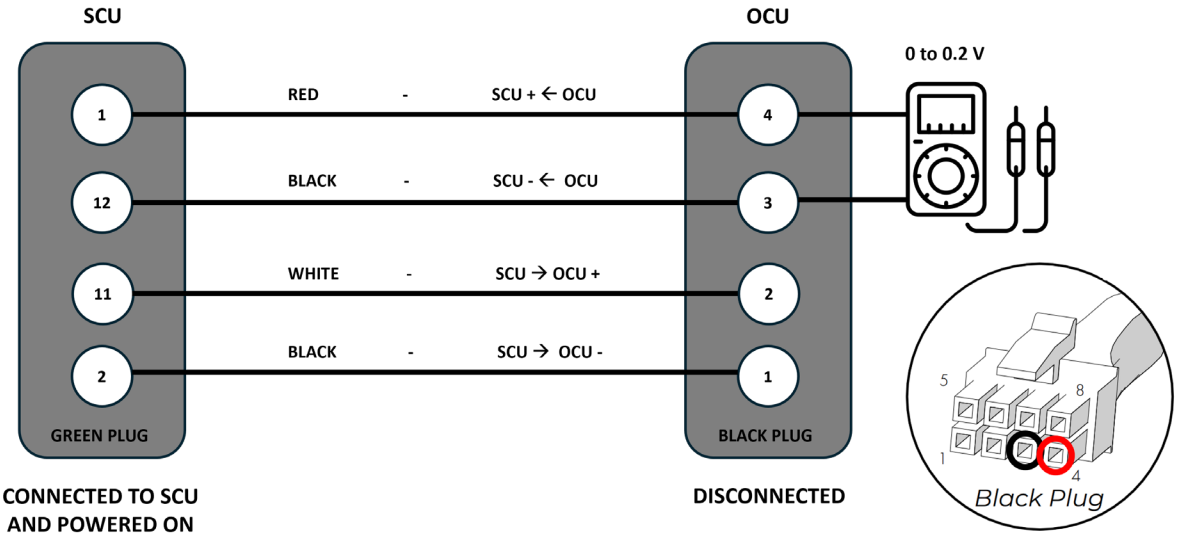

11. Test to determine if SCU at fault after test 10 – SCU Green 12 pin plug removed:

- *Test for 0V – 0.2V between pins **1 (+) / 12(-)** of SCU Connection Port C*
  - *Voltage greater than 0.2V indicates SCU at fault*
  - *To do further checks on cable perform Tests 12 & 13 – resistance tests*

*****Power system down and pull main power fuse before steps 12 and 13*****

12. OCU and cable resistance test – SCU Green 12 pin plug removed

- *Test for 110 – 130 Ohms between pins **11 (+) / 2 (-)***
  - *Fault = OCU or system cable*

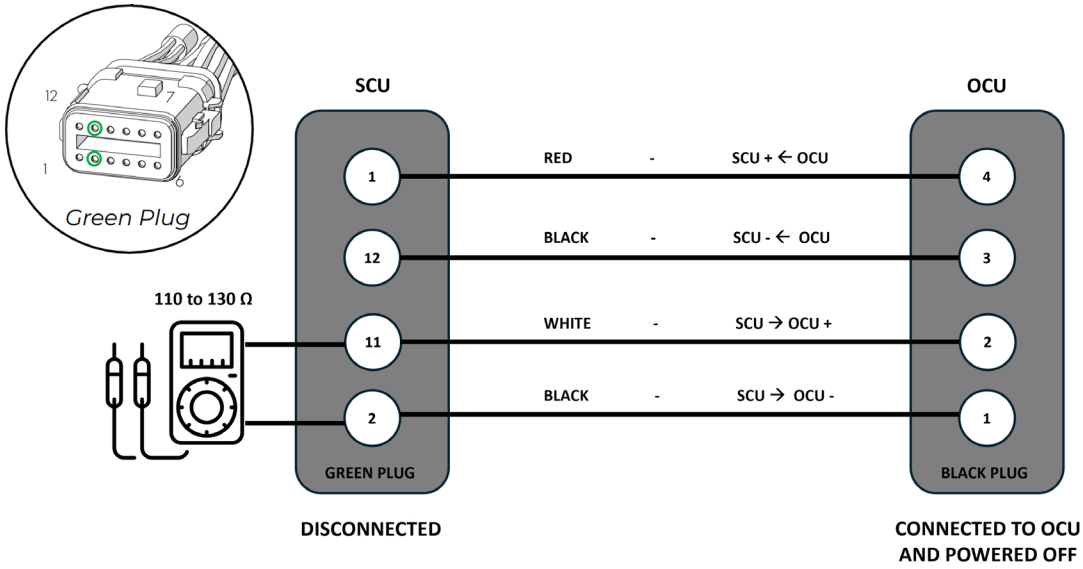

- *To eliminate cable, remove OCU 8 pin plug & test pins **1** and **2** on OCU 8-pin port within same parameters*



13. SCU and cable resistance test – OCU 8 pin black plug removed

- *Test for 110 – 130 Ohms between pins **4 (+) / 3 (-)***
  - *Fault = SCU or system cable*

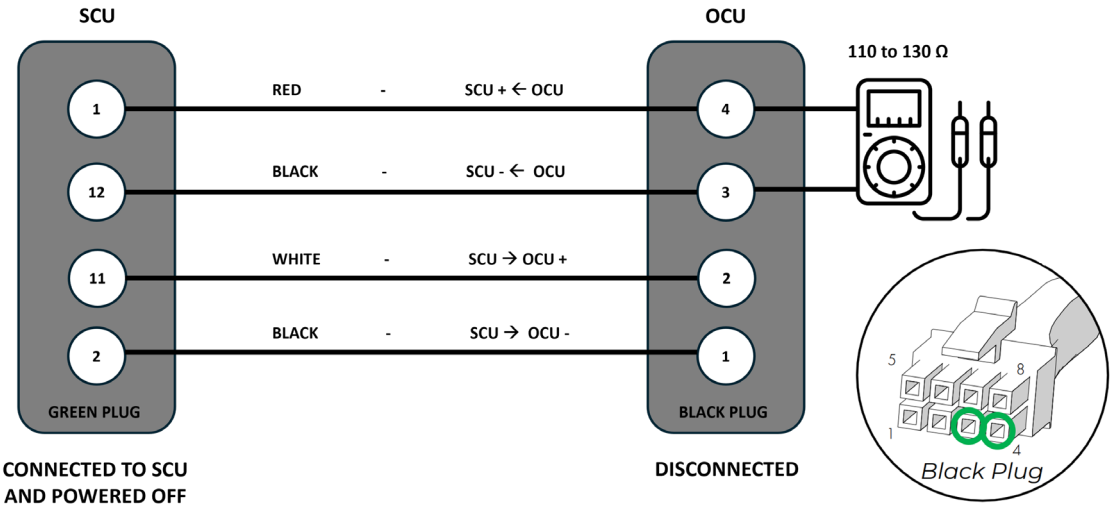

- *To eliminate cable, remove SCU 12 pin plug & test pins **1** and **12** on SCU Port C within same parameters*

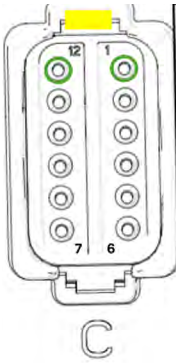

Alarm Code Diagnostic Chart

CODE NUMBER	MESSAGE TEXT	TRIGGER CONDITION	TROUBLE SHOOTING PROCEDUE	REPAIR
0011	Tire Pressure Loss *VALVE NAME* Stop vehicle now	1. Signifigant drop of air pressure detected during an inflate 2. Signifigant drop in air pressure when alarm 1001 is active 3. Tire PSI measures below emergency pressure target at start up. Alarm 1001 is also active	1. Perform a vehicle walkaround and check for leaks/ blowout of all tires, condition of all wheel end valves and hangers	Replace tire/ any damaged lines
			2. Check mainline for cuts, holes, loose or broken fittings from hanger to VCU	Repair/ replace or fittings as required
			3. Verify that there is no air leaking from the deflate port on the VCU, if there is, shut the ball valve and allow the system to stabalize to target pressure.	Remove deflate cartridge, check for sticking or damage to O-ring seals and rubber poppet, rebuild as required. Refer to Valve Service Procedure in Chapter 2.
			4. Remove the protective cap on the vcu and verify no leaks coming from the on board pressure sensor mounted to the valve block	Replace VCU pressure transducer
			5. Using the schrader port on the bottom of the valve, compare measured pressure from the tire diagnostic screen to a physical reading taken with a mechanical gauge	Replace VCU pressure transducer if large variance.
			6. Compare physcial reading taken at the VCU to a physical reading taken from the schrader on the WEV plate	Recheck all lines and fittings for leaks with soap/water spray.
1001	Low brake air pressure System on standby	Truck air supply pressure falls below 'low air supply set point' set by TIREBOSS 2 system	1. Check the alarm status screen and ensure that a 1024 [power error] code is not present, or has not been present recently	If present, see code 1024 diagnostics and fix before continuing
			2. Perform a vehicle walk around and check for leaks in the truck air supply system between the compressor and the ***TIREBOSS 2*** pressure protection valve [PPV]	Repair leaks if found
			3. Verify no leaks along SCU **'Brake Pressure'** sense line	Repair leaks if found
			4. Open the cover on the SCU and verify no leaks at pressure sensor mounted inside the SCU-V1 model.	Replace SCU pressure sensor
			5. Tee a mechanical gauge along the 'Brake Pressure' sense line and compare the mechanical reading taken to the 'Low Air Supply Set Point' found in the 'System Status' screen	Replace SCU pressure Sensor

CODE NUMBER	MESSAGE TEXT	TRIGGER CONDITION	TROUBLE SHOOTING PROCEDUE	REPAIR
1002	Com Error System not operational OCU cannot communicate with SCU	Can be caused with issues in connections, or cables, the OCU, or the SCU	Refer to Power Flow Testing to determine fault.	Repair or replace components once fault is determined after performing Power Flow Testing.
1003	Air Flow Restriction *VALVE NAME*	Large unexpected pressure changes are noticed during an inflate or deflate operation. *NOTE* in trailer circuits it is normal for this to occur when disconnecting and closing the ball valve, usually followed by a “trailer disconnect’ prompt.	1. Perform a visual check of the lines for kinks or obstructions from the tires to the VCU.	Replace lines / Replace kinked sections
			2. If new tires have been installed. The valve cores could still in the valve stems.	Remove wheel end hose from WEV plate and open ball valve. If no flow is observed, remove hose from tire and check for valve core
			3. Check for clogs along the lines. Close all wheel end valves, and disconnect from “TIRE” port on troubled VCU. Open tire valves ONE AT A TIME and listen for good airflow back through the lines.	If NO airflow is observed; Undo mainline at furthest downstream tee and re-test. Repeat until blockage is isolated and replace.
				If NO airflow is observed on a dual tire settup; Remove dropline from rotary union and retest. Repeat until blockage is isolated and replace.
				If NO air flow is observed from a single tire, remove wheel end hose from wheel end plate and retest. Replace as required.
			4. Remove both cartridges of the problem VCU and check for blockages. Remove the pressure transducer filter as well.	Clean as required. Refer to Valve Service Procedure in Chapter 2 for instructions.
			5. If certain all hoses and air passages are clear and problem persists.	Replace VCU pressure transducer

CODE NUMBER	MESSAGE TEXT	TRIGGER CONDITION	TROUBLE SHOOTING PROCEDUE	REPAIR
1005	*VALVE NAME* In Error, System Not operational	Valve solenoids detecting current when no current should be present	1. Pull the main system fuse and check for one of the two following conditions;	Air is flowing through the VCU; indicatates that there is a mechanical issue that requires repair. Pull cartridges, inspect for debris, and clean/ replace as required.
				Air is NOT flowing through the VCU; indicates that there is an electrical issue that requires further diagnosis. Continue with step 3 of of the procedure.
			2. Shut down the system entirely and remove the main fuse for at least 30s. Install the SCU Diagnostics plug. Ensuring that the OCU remains off, reinstall the fuse to power up the system (this will place the system in low power mode, if the OCU turns on, then the following diagnostic cannot be used and the settup should be repeated)	If; Diagnostic plug LEDs are all off AND the valve is activated -> Replace SCU
				If; Diagnostic plug LEDs are on AND OCU is off -> Replace SCU
				If; Diagnostic plug LEDs are off AND OCU is off -> No issue, continue to step 4
			3. Open the VCU cap of the valve experiencing issues, and unplug both the "INFLATE" and "DEFLATE" solenoids from the VCU main board. Restart the system and verify 1005 is not active.	If active; replace VCU main board
				If NOT active; continue to step 5
			4. Plug the "INFLATE" solenoid back into the VCU and restart the system.	If the valve activates when no "inflate" operation is triggered -> Replace VCU main board
				If the valve does not activate. Manually trigger an inflate and ensure proper operation. -> Continue to step 6
			5. Repeat testing sequence from step 5 for 'DEFLATE" solenoid.	Repeat as above
			6. If both tests pass, reconnect both solenoids and restart the system. If the code clears itself, monitor the system. If error code 1005 arises again, replace VCU main board immediately.	
1006	Overinflation condition *VALVE NAME* Check wheels	Excess pressure buildup in tires	1. Confirm all brake and wheel components are in working condition, and not creating excess heat. Taking measurments from the schrader valves on each wheel end plate can be used to isolate point of concern.	Ensure all componets meet manuyfacturer specificatations
			2. Using a manual gauge compare tire values from diagnostic screen to readings taken manually from the wheel end plates.	Replace VCU pressure transducer if substantially different

CODE NUMBER	MESSAGE TEXT	TRIGGER CONDITION	TROUBLE SHOOTING PROCEDUE	REPAIR
1006	Cont'd	Cont'd	3. With the VCU in a neutral state. Close all wheel end valves, remove tire main line from the VCU and feel for leaks coming past the cartridge.	Remove cartridge and inspect for damage. Replace as required
			4. Remove VCU covers and manually actuate inflate solenoid to determine if plunger is stuck or leaking.	Replace inflate solenoid
1007	Overspeed Condition. Reduce speed or change setting	Vehicle speed exceeds max speed for selected setting	This code represents a safety setting within the TB2 Software. If problems persist outside of the preset speeds, contact TPC International service department.	
1011	Configuration Error Configuration data missing	Configuration data is missing from either OCU or SCU	Ensure OCU is connected to Wifi and contact TPC International to receive new configuration file. Additional information on configurations can be found on page 3-5	
1012	Configuration Error Configuration data faulty	Faulty Configuration data on either OCU or SCU	Ensure OCU is connected to Wifi and contact TPC International to receive new configuration file. Additional information on configurations can be found on page 3-5	
1013	Version Error System not operational	OCU and SCU firmware incompatable	Ensure OCU is connected to Wifi and contact TPC international for firmware upgrades. Refer to page 4-3 for more information	
1014	Version Error System not operational	OCU and SCU firmware incompatable	Ensure OCU is connected to Wifi and contact TPC international for firmware upgrades. Refer to page 4-3 for more information	
1015	Version Error System not operational	SCU hardware incompatible with firmware	Cannot be repaired with software update. Replace SCU.	
1016	Valve Number Error System not operational	VCU numbering sequence is out of order *VALVE NAME*	1. Verify correct sequencing of valves by referring to "VCU position switch sticker" on valve caps.	Ensure communication cables run from SCU > VCU 1 > VCU 2 > ect.
			2. Remove caps and verify "VCU position switch" located on the VCU main board.	Set switches to correct value depending upon location in truck. Refer to Replace VCU Mainboard on page 2-33.
			3. Contact TPC international	
1017	Version Error *VALVE NAME* System not operational	VCU firmware incompatible	Replace VCU board	
1018	Version Error *VALVE NAME* System not operational	VCU hardware incompatible	Replace VCU board	
1019	Configuration Error System not operational	default pressure cannot be calculated	Application settings in config file are corrupt. Contact TPC International for new file download	

CODE NUMBER	MESSAGE TEXT	TRIGGER CONDITION	TROUBLE SHOOTING PROCEDUE	REPAIR
1020	Configuration Error. System not operational	Error with pressure calibration sequence	Config file is corrupt. Contact TPC International for new file download	
1021	Configuration Error. System not operational	Discrepency between expected and actual hardware on VCU main board	1. Ensure that the pressure sensor cable is properly connected to the VCU main board and free from corrosion.	Properly connect cable and/or clean corrosion on contacts
			2. Using a voltmeter, meaure voltage between the blue and black cables coming from the main board, the expected voltage is 1.4.	If reading is not 1.4V, replace VCU Main Board
1023	Power Error System not operational	SCU supply voltage outside of expected range [9 - 36v.]	1. Using the system information screen on the OCU confirm supply voltage to TIREBOSS 2 system [should be between 9 - 36v.]	Clean battery contacts/ charge truck battery
			2. Using a voltmeter, check voltage at the battery	Charge/ replace truck battery
			3. Using a voltmeter, check voltage between pins 6 & 7 AND 5 & 8 on the grey plug in the SCU.	Check cable for damage, replace as required
			4. Replace SCU	
1024	Power Error System not operational	Electroncis power supply out of range *VALVE NAME*	1. Disconnect all valves from SCU by unplugging the green connector in port C of the SCU. On the OCU status screen verify internal supply voltage is within range [11.5 - 12.5v]	If out of range, replace SCU main board
			2. Unplug any VCU jumper cables (if present), followed by reconnecting the first valve to the SCU. Check OCU status screen again and verfiy internal supply voltage within range [11.5 - 12.5v]	If out of range, replce VCU main board
			2a. Continue process until all valves are reattached	Replace main board of VCU that causes fault to occur
1025	Pressure Sensor Error *VALVE NAME* System not operational	Pressure readings outside of expected range	Replace pressure sensor board, if issue persists, replace VCU main board	
1026	Pressure Sensor Error *VALVE NAME* Valve not operational	Pressure sensor voltage outside of expected range	Replace pressure sensor board, if issue persists, replace VCU main board	
1027	Pressure Sensor Error *VALVE NAME* Valve not operational	System does not detect a VCU pressure sensor	1. Verify clean and proper connection between VCU main board and pressure sensor board. Make sure Sensor Cable is plugged into the Valve Board. Temp error can arise if the cable is not securely connected.	Clean/Reconnect as required

CODE NUMBER	MESSAGE TEXT	TRIGGER CONDITION	TROUBLE SHOOTING PROCEDUE	REPAIR
1027	Cont'd	Cont'd	2. May also be accompanied by 1037, and/or 1038. Resetting SCU will not solve the issue.	Valve board configuration data is bad and valve board needs replacement. This issue should be confined to the Valve unless there is a major issue with the SCU power supply. If 2002 is also present, it suggests a broader problem.
1028	Pressure sensor error, *VALVE NAME* not operational	Desired target pressure above pressure sensor range	1. On old systems FitPLM did not always fail a validation if target pressure in an application file was set higher than 150 PSI (1035 kPa). This has been fixed but it is possible that there are systems out there with rarely-used applications that could be invalid. 2. On firmware SR15 and earlier, there is a firmware bug that can occasionally result in requesting a negative target pressure during Airflow Restriction and Trailer Detection testing. This negative target is interpreted by the valve as a very high pressure target (since it doesn't use signed values), thereby tripping the alarm.	Upgrade the firmware.
1029	Inflate solenoid error *VALVE NAME*	The Inflate solenoid current draw is outside of the expected range during an inflate operation	1. VCU fails to detect correct current when valve is supposed to be open during inflate (solenoid, wiring, or VCU board failure) 2. VCU detects current through solenoid when valve is supposed to be closed (Solenoid not energized)	1. The VCU fails to detect the correct current (too high or too low) when the valve us supposed to be open during an inflate operation (solenoid energized). There are two possibilities: 1.a. The solenoid is operating and the current is being measured wrong (VCU) board failure. 1.b. The solenoid is not being actuated (solenoid, wiring, or, less likely - VCU board failure) 2. The VCU detects current through the solenoid when the valve is supposed to be closed (solenoid not energized) A log file can be used to determine the problem but Diagnostic Mode gives more information.

CODE NUMBER	MESSAGE TEXT	TRIGGER CONDITION	TROUBLE SHOOTING PROCEDUE	REPAIR
1029	Cont'd	Cont'd	Verify issue using log files or Diagnostic Mode	1. Go into Diagnostic Mode (very long press and hold Status icon - lower right - and enter password 30851) 2. Select a valve to test. Hit the Up arrow - Valve will inflate for 30 seconds. 3. See if valve pressure increases. INCREASES: Solenoid is being driven and fault is in current measurement - VCU NO PRESSURE INCREASE: Solenoid is not being driven (assuming wet tank pressure is good) - Wiring or Solenoid issue
1030	Deflate solenoid error *VALVE NAME*	The deflate solenoid current draw is outside of the expected range during a deflate operation	1. Check the Alarm status screen specifically for a 1040 error code	Troubleshoot and fix 1040 before continuing.
			2. Check the Alarm status screen and ensure this is not occuring in conjunction with a 1029 error code.	If 1029 Present; Replace VCU main board
				If 1029 NOT present; replace Inflate solenoid
1031	Config. Error *VALVE NAME* valve not operational	Unexpected LIN BUS identification	VCU Main Board is corrupt. Replace board.	
1032	Config. Error *VALVE NAME* valve not operational	Cannot send default pressure application	May occur occasionally and disappear. OR Alarm may not clear.	1. Restart SCU by removing fuse. 2. Update system to latest SR. 3. If problems still persists - replace SCU
1034	Config. Error *VALVE NAME* valve not operational	Faulty target parameter in configuration code	May occur occasionally and disappear. OR Alarm may not clear.	1. Restart SCU by removing fuse. 2. Update system to latest SR. 3. If problems still persists - replace SCU
1035	Valve Number Error, Valve not operational	VCU main board switch doesn't match valve location	1. Verify correct sequencing of valves by referring to "VCU position switch sticker" on valve caps.	Ensure communication cables run from SCU > VCU 1 > VCU 2 > ect.
			2. Remove caps and verify "VCU position switch" located on the VCU main board.	Set switches to correct value dependign upon location in truck. Refer to Replacing VCU Main Board on page 2-33.
			Contact TPC International	

CODE NUMBER	MESSAGE TEXT	TRIGGER CONDITION	TROUBLE SHOOTING PROCEDUE	REPAIR
1036	Com. Error *VALVE NAME* valve not operational	Communication lost between SCU and VCU	"Failure could be at either end or could be cable Note: Valves are connected in parallel meaning the order the valves are plugged in with the SCU does not matter. There are 3 scenarios for Valve Comm Errors: 1. One valve in a multi valve system is reporting errors 2. All valves in a multi valve system are reporting errors 3. A single valve system is reporting errors"	One valve error in a multi valve system: In a multi valve system with only 1 valve operating error free we know that the OCU, SCU and system cable are okay. The problem must be in valve-to-valve cable or the valve board is not communicating properly. 1. One at a time connect each valve to the system cable, disconnecting the other valve(s). You should see a comm error for the "missing" valve(s). With no errors for the valve that is connected. 2. If all valves work in the above test the problem must be the valve-to-valve cable. All Valves In a multi valve system reporting errors: It is possible that one bad valve can disrupt communication to all valves. 1. One at a time connect each valve to the system cable, disconnecting the other valve(s). You should see a comm error for the "missing" valve(s). If any of the valve's work, go back to one valve error in a multi valve system. 2. If none of the valve's work, there is three possibilities - All the valves have issues (unlikely) - System cable is bad - SCU is bad A single valve system is reporting errors: 1. Can be tested by plugging in a known good valve to the system cable and checking for communication (confirm that known good valve is in correct position setting) 2. If that fails Inspect or swap system cable with last resort being swap the SCU

CODE NUMBER	MESSAGE TEXT	TRIGGER CONDITION	TROUBLE SHOOTING PROCEDUE	REPAIR
1037	Config. Error *VALVE NAME* valve not operational	Pressure transducer range mismatch	Verify clean and proper connection between VCU main board and pressure sensor board. Make sure Sensor Cable is plugged into the Valve Board. Temp error can arise if the cable is not securely connected.	Clean/Reconnect as required
			May also be accompanied by 1027, and/or 1037. Resetting SCU will not solve the issue.	Valve board configuration data is bad and valve board needs replacement. This issue should be confined to the Valve unless there is a major issue with the SCU power supply. If 2002 is also present, it suggests a broader problem.
1038	Config. Error *VALVE NAME* valve not operational	Default pressure outside of sensors measurable range	Verify clean and proper connection between VCU main board and pressure sensor board. Make sure Sensor Cable is plugged into the Valve Board. Temp error can arise if the cable is not securely connected.	Clean/Reconnect as required
			May also be accompanied by 1027, and/or 1037. Resetting SCU will not solve the issue.	Valve board configuration data is bad and valve board needs replacement. This issue should be confined to the Valve unless there is a major issue with the SCU power supply. If 2002 is also present, it suggests a broader problem.
1040	Valve Power Error *VALVE NAME* valve not operational	Supply voltage out of range	1. Check the Alarm status screen specifically for a 1024 error code.	Resolve 1024 error code before returning
			2. Remove the connector from the first valve. Using a voltmeter, check for battery voltage between pins 4&5	If battery voltage WITHIN range -> replace VCU board. If battery voltage OUTSDIE range -> continue to step 3.
			3. Verify clean and proper connection between VCU and SCU.	Clean and replace as required
			4. Remove the green plug from the SCU and using a voltmeter look for battery volage between pins 4&9	Replace SCU
1041	GPS Lost Lock	Occurs when the OCU loses GPS signal for a period of time	[If equipped with an external antenna] Verify that antenna is properly connected, cords and connections are in good shape and that the reciever is located with a clear view of the sky	Clean/replace and fix as required.
			Contact TPC International	

CODE NUMBER	MESSAGE TEXT	TRIGGER CONDITION	TROUBLE SHOOTING PROCEDUE	REPAIR
1042	File System Error, System not operational	OCU file system is corrupted	This alarm is no longer implemented. If it does appear, perform the repair steps	1. Power off OCU and wait 30 seconds 2. If still present reload the latest SR
1044	Config. Error, System not operational	Configuration data incompatible between OCU & SCU	1. Re-download problem configuration by following procedures in Chapter 3 2. Contact TPC International	
1045	Heater power out of range *VALVE NAME*	Valve heater hardware incompatible with VCU mainboard	Confirm if correct wattage heater is installed in VCU	Replace correct heater
2001	Heater Current error *VALVE NAME*	Heater current is out of range while heater is on OR heater is drawing current while off	1. In the Alarms menu, check for Silent alarm 3001 troubleshoot first	
			2. Verify heater status in the heater status screen and test the conditions right; - Above 10 °C = AutoOff - Below 5 °C = AutoOn	Heater status = AutoOff & heater current exceeds 0.2 A, replace VCU main board
				Heater status = AutoOn & heater current BELOW expected value, replace the heater; 40W 12v expected value = 1.8 - 2.2 Amp 80W 12v expected value = 4.8 - 6.1 Amp 80W 24v expected value = 2.4 - 2.9 Amp
				Heater status = AutoOn & heater current ABOVE expected value, check heater wiring for damage/ replace VCU main board; 40W 12v expected value = 1.8 - 2.2 Amp 80W 12v expected value = 4.8 - 6.1 Amp 80W 24v expected value = 2.4 - 2.9 Amp
			3. On the heater status screen, verify the temperature is reasonable for ambient temperature (In cold conditons the valve should be above freezing)	If out of reasonable current range, replace sensor board
				If within reasonable current range - verify that the sensor is correct for your application
2002	Temp. sensor error *VALVE NAME* heater not operational	When the temperature sensor reports conditions below -50 C or above 80 C	Monitor the valve heater status screen and verify reported temperature is reasonable for troubled valve.	If out of reasonable current range -> Replace sensor board
				If within reasonable current range -> Check connections from VCU main board to heater
			Replace VCU main board	
2003	Brake Air pressure sensor error	Brake Air pressure sensor ereading outside of range	1. Check the alarm status screen, specifically for a 1024 error code.	Troubleshoot and fix 1024 on page 5-10 before continuing
			2. Replace SCU pressure sensor board	
2004	Maximum time in setting exceeded	Maximum time has been reached that vehicle may stay in target setting.	It is normal for this alarm to occur while in "Emergency" setting. However if it occurs in any setting besides "Emergency" contact TPC immediately	

CODE NUMBER	MESSAGE TEXT	TRIGGER CONDITION	TROUBLE SHOOTING PROCEDURE	REPAIR
2005	Replace OCU Batteries	Batteries in OCU are low	Replace OCU batteries	Refer to Service Bulletin: OCU Internal Battery Replacement
2006	No Unloaded target - using loaded target	No valid unloaded target pressure set	1. Change to a different sertting, wait 5sec. Before returning to setting causing problems 2. Power down SCU bu removing the main fuse, waitg 30sec before restarting 3. Contact TPC international	
2009	Self test failed	No valid unloaded target pressure set	Contact TPC International	
2010	Suspension Pressure sensor error	Pressure sensor reading invalid pressure values	1. Tie a manual gauge into the suspension sense line and compare reading to reading found on Load sense status screen	Replace SCU pressure transducer
			2. Contact TPC International	
2011	System not in Service	The system has not been placed into service	1. Ensure that codes 1011 and/ or 1044 are not present in the OCU Alarm status screen	Diagnosis and Repair before returning
			2. On the OCU system info screen, locate and select the green “pointing down” arrow	If arrow not present; Contact TPC International
				If arrow present; Press and ensure the ‘In service date’ changes from unavailable to current date
				If arrow present but issue persists; continue to step 3
			3. Power down the OCU using the power switch on the unit. Reboot after 30 sec. and reattempt step 2	
			4. Power down the SCU by pulling the system main fuse. Reboot after 30 sec. and reattempt step 2	
			5. Contact TPC International	
2012	No Serial Number Found *VALVE NAME*	VCU does not report serial number	Contact TPC International for VCU Mainboard replacement	
2013	No Serial Number Found	SCU does not report serial number	Happens on SR12 or earlier Have a Diagnostic Tool? Yes - Reporgram SCU with Diagnostic Tool No - Send preprogrammed replacement SCU Updating AFTER the serial number is lost does NOT recover it	“There is no way to reload the SCU Serial Number other than by using the Diagnostic Tool with the appropriate cable between a PC running the tool and the Diagnostic Port (where the brown connector plugs in) on the SCU. The issue was resolved in SR13 (July, 2021). Only system running SR 12 and earlier are succeptible. Preemptively upgrading systems to current software will alleviate the chance of this happneing. Preprogrammed replacement SCU to be sent if no Diagnostic tool is available in the field.”

CODE NUMBER	MESSAGE TEXT	TRIGGER CONDITION	TROUBLE SHOOTING PROCEDURE	REPAIR
2017	System installed incorectly	OCU has different SSN and install date from SCU	1. On the OCU alarm status screen, ensure 1011 and 1044 are not present.	Diagnosis and repair before returning
			2. Transfer configuration data from OCU onto SCU.	
			3a. If SCU or OCU and SCU were replaced, push the green down arrow on the OCU system information screen to transfer in service data. 3b. If only the OCU is replaced, push the green UP arrow on the system information screen to transfer in-service data.	
			4. If problem persists, follow the following procedure; - Power down OCU, wait 30sec., try steps 2 & 3 again - Power down SCU, wait 30 sec., try steps 2&3 again	
			Contact TPC International	
3000	Unknown Alarm	SCU reports an alarm code not recognized by OCU	1. Pull the main fuse leading the SCU and wait 30 sec. before restarting.	
			2. Contact TPC International	
3001	Heater Voltage Low	VCU Detects supplied heater voltage is low	1. On the OCU alarm status screen, ensure 2001 heater current error is not present	Diagnosis and repair before returning
			2. On the alarm status screen, determine whether multiple valves are reporting errors	If all VCU's are reporting errors; - Inspect and repair data cable between first VCU and SCU.
				If only a single VCU [that is not the last valve] is reporting errors; - Replace VCU mainboard
				If multiple [but not all] VCU's **OR** the last VCU is reporting errors; - Continue with Step 3
			3. Turn the ignition off and ensure system is still connected to the battery. Remove the blank plug from the last valve and using a voltmeter measure the voltage between pins 1&7	If measured voltage **DOES NOT EQUAL** battery voltage; - Continue testing pins 1&7 upstream until the problem VCU or cable is located. Replace/ Repair as required.
				If measured voltage **EQUALS** battery voltage; - Contact TPC International for further diagnostics
3002	LIN BUS transceiver fault	VCU detects a momentary failure in the LIN BUS transceiver	1. On the OCU alarm status screen, ensure 1036 is not present	Diagnosis and Repair before returning
			2. If alarm code 3002 is the only active alarm recorded, replace VCU main board of problem VCU	
3003	Transient Error	Momentary disruption between OCU and VCU	1. On the alarm status screen, ensure 1036 error is not present	Diagnosis and Repair before returning
			2. If alarm 3003 is the only active alarm recorded, pull the main fuse and wait 30 sec. before rebooting. Contact TPC International if unresolved	

CODE NUMBER	MESSAGE TEXT	TRIGGER CONDITION	TROUBLE SHOOTING PROCEDURE	REPAIR
3004	Invalid Pressure command *VALVE NAME*	VCU recieves an invalid pressure command from SCU	A single or very occasional alert here can be ignored. Not related to OCU.	If error is consistent - replace both: SCU and VCU Board.
3005	Pressure command Ignored *VALVE NAME*	VCU recieves pressure command at a time when it cannot act upon it	A single or very occasional alert here can be ignored. Not related to OCU.	If error is consistent - replace both: SCU and VCU Board.
3006	Communicat-ion restored *VALVE NAME*	LIN BUS communication has been restored with a previously non-cummunicaing VCU. VCU is now in default mode	A single or very occasional alert here can be ignored. Not related to OCU.	If error is consistent - replace both: SCU and VCU Board.
3008	Pressure Cycling *VALVE NAME*	System keeps overshooting target triggering rapid inflates and defaltes	1. Calibrate VCU - Trigger a long deflate cycle by going directly from the highest to the lowest pressure setting - Trigger a long inflate cycle by going directly from the lowest to the highest pressure setting	
			2. Check lines for kinks and/ or blockages	Repair / Replace as required
			3. Check VCU internals for debris and/ or blockages	Clean / Replace as required
			4. Repalce VCU main board	
			5. Replace entire VCU	
			6. Contact TPC International	
3010	OCU Cannot communicate with SCU Intermittent error	OCU fails to communicate with SCU	Issue with SCU File system: First try resetting the power to SCU by pulling power fuse. Also ensure that fuse & holder have good connection. Check for good ground and ensure all cable connections are good at both SCU and OCU. Refer to Power Flow Testing Try reflashing SCU file system (SR 16 or higher only)	Repair or replace components once fault is determined after performing Power Flow Testing. If above does not resolve the issue, reflash the SCU file system. Ensure there is no 1002 Comm Error. Reliable communication between SCU and OCU is required. SR16.00.07 is required - update if required. If system still shows some alerts then SCU will need replacing, i.e. hardware issue.

CODE NUMBER	MESSAGE TEXT	TRIGGER CONDITION	TROUBLE SHOOTING PROCEDURE	REPAIR
3012	VCU pressure sensor missing	Indicates a momentary disruption with VCU pressure sensor board	1. On the OCU Alarm status screen, ensure a 1027 error is not present.	Diagnosis and repair before returning
			2. Pull the main fuse and wait 30 sec. before restarting system.	
			3. Contact TPC International	
3013	VCU Inflate Solenoid current error - Intermittent	Momentarty disruption of Inflate solenoid current	1. On the OCU Alarm status screen, ensure a 1029 error is not present.	Diagnosis and repair before returning
			2. Pull the main fuse and wait 30 sec. before restarting system.	
			3. Contact TPC International	
3014	VCU Deflate Solenoid current error - Intermittent	Momentary disruption of Deflate solenoid current	1. On the OCU Alarm status screen, ensure a 1029 error is not present.	Diagnosis and repair before returning
			2. Pull the main fuse and wait 30 sec. before restarting system.	
			3. Contact TPC International	
3015	VCU Electrical Supply Out of Range - Intermittent	Indicates a momentary disruption of supply voltage to a VCU main board	1. On the OCU Alarm status screen, ensure a 1040 error is not present.	Diagnosis and repair before returning
			2. Pull the main fuse and wait 30 sec. before restarting system.	
			3. Contact TPC International	
3016	GPS Lock Lost - Intermittent	GPS Signal has been lost	1. Power off OCU. Wait 30 sec. before restarting.	Diagnosis and repair before returning
			3. Contact TPC International	
3017	Heater Current error - Intermittent	Momentary disruption of heater current on VCU	1. On the OCU Alarm status screen, ensure a 2001 error is not present.	Diagnosis and repair before returning
			2. Pull the main fuse and wait 30 sec. before restarting system.	
			3. Contact TPC International	
3019	Diagnostic Interface Communication error	SCU detects error on the Serial diagnostic port	Contact TPC International	
3020	Auxillary Interface Communication Error	SCU detects error of the auxillary serial port	Code appears during short intermittent errors SCU is seeing data from OCU but data is incorrect Likely a intermittent cable issue Cycling the SCU power for a minute can fix **rare** Refer to Power Flow Testing	Could either be SCU or the OCU (if cable is confirmed okay). Either OCU is transmitting screwed up data or SCU is corrupting the data on reception. Repair or replace components once fault is determined after performing Power Flow Testing.

CODE NUMBER	MESSAGE TEXT	TRIGGER CONDITION	TROUBLE SHOOTING PROCEDURE	REPAIR
3023	Logger Interface Communication Error	SCU detects errors on Logger serial port	Contact TPC International	
3024	GPS Lock Lost	GPS Signal has been lost	1. On the OCU Status screen, ensure a 1041 error is not present. 2. Power off OCU. Wait 30 sec. before restarting. 3. Contact TPC International	
		Replacing OCU from one vehicle to another	SCU must be in good operating condition. When the different OCU is installed, there will be alerts on “System Installed Incorrectly” Go to the info screen and select the upload arrow in shield to bring system info and Serial number up from SCU to OCU A Config Error will show, which will also need a upload of the config file from the SCU to OCU on the Config screen – up arrow. Note that the replacement OCU component serial numbers will not match what is in FitPlm, and can be updated later. Another option, if the SD Card is good in the OCU that is coming out of the first truck, you can take that SD card and install in the replacement OCU.	

OCU Diagnostic Lights

The OCU diagnostics lights are located on the main circuit board of the unit. Thus, a partial disassembly of the OCU unit must be performed in order to access the lights.

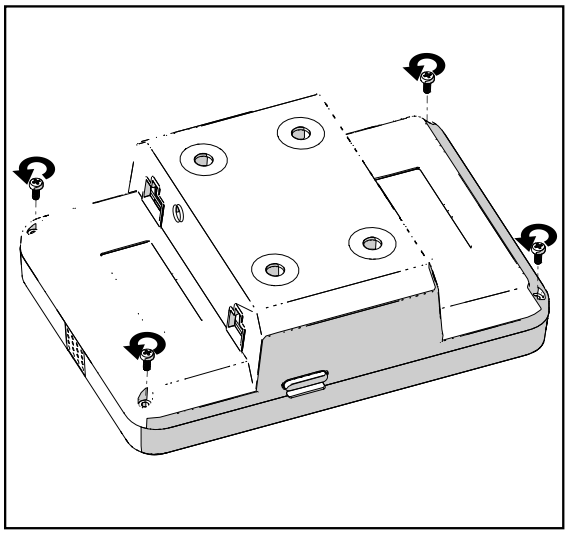

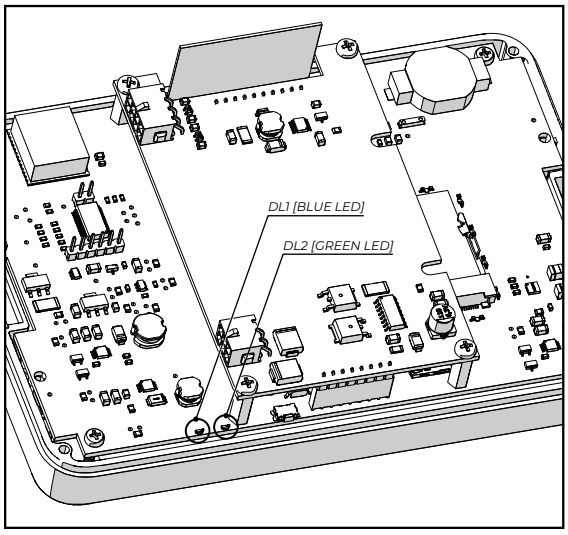

Disassembling the OCU;

1. *Begin by unplugging the power and data connections leading into the unit (the two rectangle connectors)followed by loosening the finger screw on the RAM Mount to remove the OCU unit from its mount.*
2. *Orient the case so that it is facedown on the work surface with the power button facing you. From here, remove the four T8 screws located in the corners of the case.*
3. *With the screws removed, carefully separate the case to reveal the circuit board. There are cables that run between components mounted to either half of the case so use caution to ensure these are not damaged.*
4. *With the case open, you will be able to find the two diagnostic LED's mounted to the board, they are located in the bottom left corner of the board beside the mezzanine board standoff. They LED's are labeled 'DL1' & 'DL2' respectively (See image left).*
5. *The data and power cables can be reconnected to the board now and a diagnostics test may begin.*

Understanding OCU Diagnostic Lights;

Refer to the charts on the following page for a detailed breakdown of the various light patterns and the potential issues and solutions.

Re-assembling the OCU;

Once the necessary diagnostics have been performed, turn off the truck and wait ~30 seconds before disconnecting the data and power cables from the OCU. Finally, reverse steps 1-4 from the disassembly process to close up the OCU and return it to its operational state.

*The **DL1 LED** indicates the state of the **power control processor U5**. Flash lengths are; Long Flash, ~1 s. | Short Flash ~0.2s*

DL1 (Blue) LED	***Description***
OFF (Continous)	*IGN power **off**, all OCU supplies **off***
1 long off, long off (50% duty cycle long flash)	*IGN power **on**, all OCU supplies **on**, SOM providing heartbeat signal. **Normal operating state***
1 short flash	*IGN power **on**, all OCU supplies **off**, waiting (>5 s) to ensure stable IGN power*
2 short flashes	*IGN power **on**, all OCU supplies **on**, waiting indefinetly for power switch to be pressed **(S1 Switch)***
3 short flashes	*IGN power **ignored**, all OCU supplies **off**, waiting (<0.5 s) for OCU supplies to decay to nothing **(State normally to short to observe)***
1 long flash, short off	*IGN power **on**, all OCU supplies **on**, waiting (<0.6 s) for peripheral enable **(State normally to short to observe)***
1 short flash, 1 long flash	*IGN power **on**, all OCU supplies **on**, waiting (<90 s) for SOM startup. **(State normally to short to observe)***
2 short flashes, 1 long flash	*IGN power **on**, all OCU supplies **on**, waiting (<90 s) for SOM heartbeat*
3 short flashes, 1 long flash	*IGN power **ignored**, OCU supplies **on** (no backlight), waiting (<30 s) for SOM shutdown*

*The **DL2 LED** indicates the state of the **OCU processor**. Flash lengths are; Long Flash, ~1 s. | Short Flash ~0.05s*

DL2 (Green) LED	***Description***
OFF (Continous)	*SOM not powered, or not installed*
1 long off, long off (50% duty cycle long flash)	*SOM firmware operating normally, providing heartbeat signal. This is the normal operating state.*
ON dim continous	*SOM powered, not booted. This is commonly due to a missing or blank SD card*
ON bright continous	*SOM powered, either booting or shutting down*
1 (or more) short flashes	*SOM powered and startup completed, software not operating normally. Number of flashes indicates the software that is not operating; 1 - Java GUI 2 - GPS processing 3 - Power shutdown detection*

SCU-V2 DIAGNOSTIC LED LIGHTS

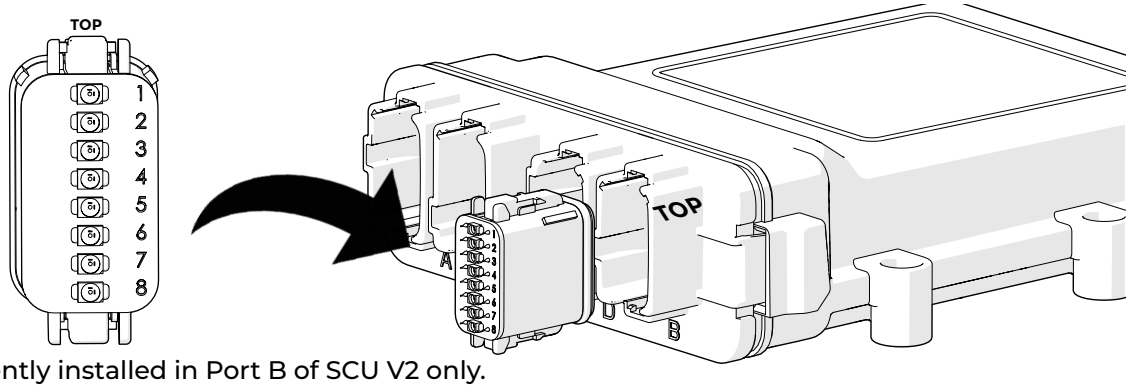

NOTE:

- This plug is permanently installed in Port B of SCU V2 only.
- SCU V2 only works with SR 17.00 and above.

LED Location	LED Color	Light Purpose	LED Activity	Light Meaning/Status	Repair/Locations to check
1	Green	This light is used to indicate that the SCU has battery power applied, SCU has been successfully programmed with SR17.00 or above, and to confirm SCU internal main components are all functional	Blinks every 4 seconds with other LEDs off - upto 4 minutes	**SCU in Low Power Mode on initial power up** Only when power is first applied by inserting fuse or turn on master switch.	LED not blinking: - Check main power supply to SCU
			Blinks once every 15 seconds	**SCU is in Low Power Mode** after initial 4 minutes & whenever in Low Power Mode during normal operation	LED not blinking: - Check main power supply to SCU
			Steadily blinks with #7 Red LED On-Off-On-Off	**SCU is in Full Power Mode**	LED not blinking: - Check main power supply to SCU
2	Green	This light is used to indicate the status of power feeding the SCU	On	Power On/Normal operation	Normal State in Full Power Mode
			Off	Low power mode	Normal State in Low Power Mode
			Slow Flash	Undervoltage situation (< 9.0V)	LED blinking slowly: Check main power supply to SCU. Possible low vehicle battery voltage. ***Probable Error Code 1023 - "Power Error"***
			Fast Flash	Overvoltage situation (> 30.0V)	LED blinking quickly: Check main power supply to SCU for overvoltage condition. Possible alternator problem on vehicle or wiring error. ***Probable Error Code 1023 - "Power Error"***
3	Orange	This light is used to indicate the status of the heaters in the VCU. There is only one light for all VCU heaters and will only indicate issues, and not issue locations	On	VCU heaters are turned on and functioning	Normal state in Full Power Mode with one or more valves reporting low temperature.
			Off	Low power mode/No heaters are running	Normal state in Low Power Mode. Normal state in Full Power Mode when all heaters are off.
			Slow Flash	At least 1 VCU heater voltage is out of range	LED blinking slowly: If #2 Green LED indicates an error condition, address that first. If #2 Green LED is ON, check heater wiring and/or VCU Boards. OCU Alarm Screen should indicate which valve(s) are causing the error. ***Probable Error Code 1045 - "Heater Power Out of Range"***
			Fast Flash	At least 1 VCU heater is turned on/off when it shouldn't be or vice versa	LED blinking quickly: Heater current to one or more valves is not as expected. OCU Alarm Screen should indicate which valve(s) are causing the error. Either faulty heater element or wiring or valve board. ***Probable Error Code 2001 - "Heater Current Error"***

LED Location	LED Colour	Light Purpose	LED Activity	Light Meaning/Status	Repair/Locations to check
4	White	This light is used to indicate the status of internal 12V power for the SCU + Valves	On	12V power is on and within range	Normal state in Full Power Mode.
			Off	Low power mode/No 12V power within SCU	Normal state in Low Power Mode. If SCU is in Full Power Mode (other lights on), this indicates an SCU 12 volt Power Supply failure. Replace SCU.
			Fast Flash	12V power is out of range	LED Blinking quickly: - Indicates a 12V Power Supply failure on the SCU Board. Replace SCU. ***Probable Error Code 1024 - "Power Error"***
5	Yellow	This light is used to indicate the status of LIN bus communications between the VCU's and the SCU	On	LIN bus communication is active	Normal State in Full Power Mode
			Off	Low power mode/LIN bus communication is idle	Normal State in Low Power Mode. If other LEDs are on proving system is in Full Power Mode, this conditions indicates a catastrophic LIN bus failure. In a multi-valve system, likely an SCU or SCU/VCU Cable failure. In single valve system could also be VCU Board failure. ***Probable Error Code 1036 - "Com Error" on ALL valves.***
			Single/ Dual/ Triple LED Flash	The number of LED flashes indicates the VCU that is not communicating. If more than one VCU is not responding, the lighting will cycle between them	Communication failure with one or more valves. If error code is NOT present for one or more valves, SCU is OK. (on a two valve system, for example, two flashes repeating indicates that only valve 2 is experiencing problems (valve 1 is communicating), so Valve 1 and SCU are OK. Check valve switch setting on ALL valves (even the one(s) that are NOT reported as an error). Check cable to affected valve(s) or replace indicated VCU Board(s). ***Probable Error Code 1036 - "Com Error" for the indicated valve(s).***
6	Blue	This light is used to indicate if there is communication between the OCU and SCU over BLE or RS-485 serial interfaces	On	OCU-SCU communication is active and functioning.	Normal State in Full Power Mode
			Off	OCU-SCU communication is idle/Low power mode	Normal State in Low Power Mode. If other LEDs are on indicating system is in Full Power Mode, it indicates a possible SCU Failure.
			Fast Flash	OCU-SCU communication error	Indicates that SCU has been communicating with OCU (enough to get into Full Power Mode), but is now no longer communicating. Most likely an OCU/SCU cable problem rather than a hardware problem of either SCU or OCU. Perform Power Flow Tests. ***Probable Error Code 3010 - "Com Error Intermittent". May be a precursor to Error Code 1002 - "Com Error"***

LED Location	LED Colour	Light Purpose	LED Activity	Light Meaning/Status	Repair/Locations to check
7	Red	This light is used to indicate the communication status for the Diagnostic & Datalogging Port D (Brown Plug) The default is for Diagnostic Tool unless a datalogger is connected	On	Logging port commnunication is active	Normal condition when SCU is in Full Power Mode and Datalogging is enabled and active. If a datalogger is connected and the LED is not on, check cable connections to Datalogger, power to GEO-200 module (if present), etc.
			Off	Low power mode/Logging port communication is idle	Normal condition when SCU is in Low Power Mode. In Full Power Mode indicates that Datalogger is connected but is NOT sending data. Check Datalogging configuration on OCU, check cables, check power to GEO-200 module (if installed).
			Slow Flash	Diagnostic port communication is idle	Normal condition when SCU is in Full Power Mode and no Datalogger is connected.
			Fast Flash	Error in either diagnostic or datalogging port communication	Error condition on Port. This error should never occur in isolation. Check OCU Alarm Screen for other alarm codes. Check system Datalogging configuration on OCU. If nothing seems wrong, update system software. Behavior is sometimes incinsistent with old SCU firmware. If this condition occurs with SR17 or newer firmware, SCU has likely failed in an unconventional manner.
			Long Flash followed by two short Flashes, repeatedly	Logging port communication is active	Normal condition when system is in Full Power Mode, Datalogging is active and messages are being transferred to logging device. If this pattern does NOT appear, check cable, check operation of Datalogger (is data being received) and/or GEO-200 module.
8	Red	This light is used to indicate the presence of active alarm conditions in the system. It shows Warnings, Cautions, Notices and Quiet Alarms. Only the highest priority alarm class is shown.	Off	No Alarms are active	Normal State when System is in Low Power Mode or in Full Power Mode with no active alarms.
			On	Invalid state	LED Constantly ON: SCU has failed.
			Fast Flash	Warning Error Code is active	Tire Pressure Loss is currently the only Warning Error. ***Error Code 0011***.
			2 Slow Flashes, 4 Fast Flashes, repeated	Caution Error Code is active	Refer to OCU Alarm Screen to determine exact Caution Alarm Code and troubleshoot accordingly.
			Slow Flash	Notice Error Code is active	Refer to OCU Alarm Screen to determine exact Notice Alarm Code and troubleshoot accordingly.
			1 Very long Flash, 2 Fast Flashes, repeated	Silent Error Code is active	Refer to OCU Alarm Screen to determine exact Silent Alarm Code and troubleshoot accordingly.

VALVE BOARD SCHEMATIC

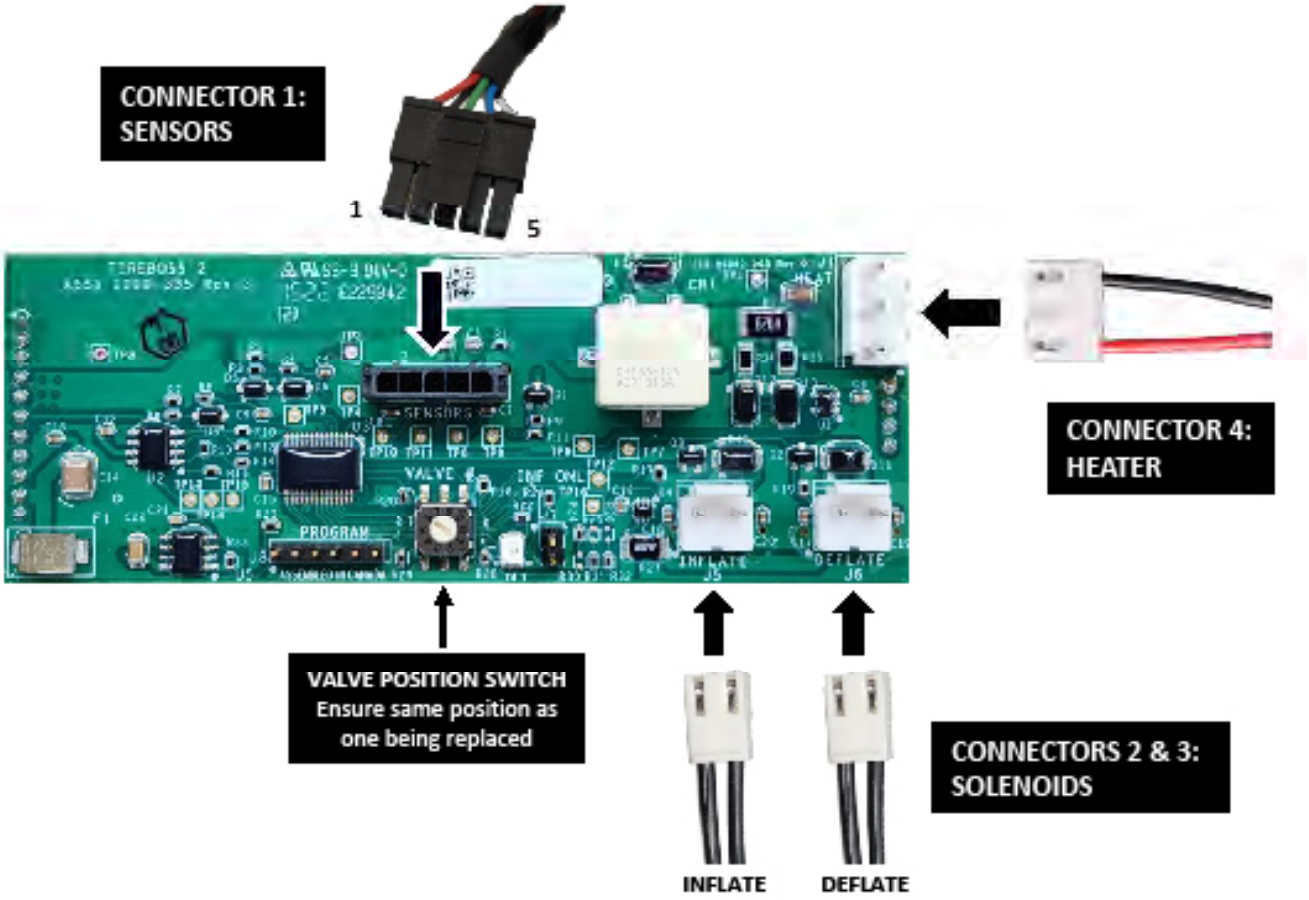

CONNECTOR 1 - SENSORS			
Pin #	Wire Color	Function	Voltage Measurement
1	Red	Sensor Power	5.0 V +/- 0.25 V
2	Black	Sensor Ground	0 V. Measure other voltages with respect to this point
3	Green	Pressure	0.5 to 4.5 V (0 to 150 PSI). Pressure (PSI) = (37.5 * voltage) - 18.75. For example, measured 2.5 V = (37.5 * 2.5) - 18.75 = 75 PSI. Voltage much below 0.5 V or above 4.5 V typically indicates sensor failure.
4	Blue	Pressure Sensor Range	1.4 +/- 0.2 V indicates 150 PSI sensor range.
5	White	Temperature	0.1 to 1.3 V (-40 to +80 C). Temperature (deg C) = (100 * voltage) - 50. For example, measured 0.65 V = (100 * 0.65) - 50 = 15 degrees C. Voltages below 0.1 or above 1.3 typically indicate sensor failure.
CONNECTORS 2 & 3 - SOLENOIDS			
1	Black	Enable Inflate/Deflate Solenoid	12 V across pins 1 and 2 when energized
2	Black		
CONNECTOR 4 - HEATER			
1	Red	Turn Heater on or off	12 V across pins 1 and 3 when heater on
2	N/A		
3	Black		

VALVE BOARD TESTING

Test 1 - Transducer Board:

- *Test between pins **1 (red +)** and **2 (black -)** for 5V - Sensor Power.*
- *Test between pins 3 **(green +)** and **2 (black -)** for 0.5V – 4.5V – pressure reference voltage*
- *Test between pins **4 (blue +)** and **2 (black -)** for 1.4V +/- 0.2v – 150 PSI Sensor Range*
- *Test between pins **5 (white +)** and **2 (black -)** for 0.1v to 1.3v – Temperature Reference Voltage*

Test 2 - Solenoids (Inflate & Delfate):

- *While system is performing an inflate, remove solenoid inflate plug from the valve board and test for 12V across the two pins.*
- *While system is performing a deflate, remove solenoid deflate plug from the valve board and test for 12V across the two pins.*

Test 3 - Heater:

- *Remove heater plug from valve board and turn on the heater using the Diagnostic Mode via the OCU.*
- *While the heater is energized, test for battery voltage across pins 1 and 3 on the board connector (will coincide with 12V or 24V system).*

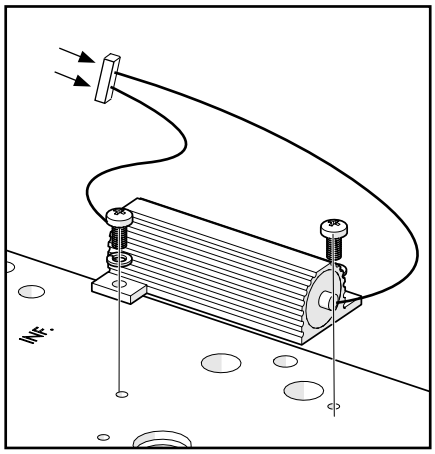

- *With heater plug removed test resistance through the heater. You should get a reading of:*

** **Trucks with 12V systems:***
12V (40 Watt) Heater: 10.0 (+/- 0.2) Ohms
12V (80 Watt) Heater: 2.4 (+/- 0.2) Ohms

Trucks with 24V systems:
24V (40 Watt) Heater: 10 (+/- 0.2) Ohms

**** NOTE:** The majority of 12V systems before System Serial Number 1705 used 40 watt heaters. Contact TIREBOSS with TB Serial Number to confirm heater wattage on early systems below SSN 1705.*

STRIPED SCREEN TROUBLESHOOTING

Tireboss 2 Operator Control Units (OCUs) occasionally, on startup, exhibit only vertical-colored lines on the screen. This condition may persist for a few minutes and then go black or may stay indefinitely until the unit is shut off. This document contains troubleshooting and the common causes that we have encountered.



NOTE: Components inside OCU are fragile and easily damaged. Do not proceed if uncomfortable servicing laptop type tech.

NOTE: Components inside OCU are susceptible to Electro-Static Discharge (ESD). Before disassembly, ground yourself by touching a metal structure or component to drain static charge from your body and do not move around more than necessary during the entire process.

Required Tools:

- *T8 Torx Screwdriver*
- *Small Flat Blade Screwdriver*
- *#1 Phillips Screwdriver*

Known Causes:

- *May be transient error condition due to faulty startup of the system and will resolve next time the system is started.*
- *Processor on the SOM is not running, hence the display is never being written to.*
- *Processor on the SOM is running, but there is a communication problem between the SOM and display.*

Troubleshooting Steps:

1. *Turn the vehicle ignition off and wait 60 seconds.*

2. *Start the engine and see if the problem is resolved. If it is, and if this problem rarely occurs, no further action is required. Otherwise, proceed with Step 3.*

3. *Allow vehicle to operate until wet tank pressure exceeds the Pressure Protection Valve (PPV) pressure (typically above 100 psi).*

4. *Operate system for an additional 3 minutes. Do not touch screen or turn off ignition during this time. Listen for sounds from the OCU speaker or signs of inflate or deflate activity in the valve(s). if any such "signs of life" are noticed, proceed to the Display*

Communication Troubleshooting section.

5. *Reduce wheel end pressure by 4-5 psi, (whether by Shrader valve or air line). If system responds by reinflating, proceed to Display Communication Troubleshooting section.*

6. *Otherwise, proceed to Processor Failure Troubleshooting section.*

Processor Failure Troubleshooting:

Perform the following steps to diagnose and repair a processor boot failure:

1. *Unplug all cables from OCU and remove from vehicle.*

2. *Set the OCU face down on a protective surface so as not to damage the screen.*

3. *Remove the four T8 screws on the rear of the unit.*





4. *Carefully lift the back cover off the unit. NOTE: There are cables attached to the cover, use caution with splitting. Do not strain cables.*

5. *Remove the three NiMH batteries, take note of orientation for reinstallation.*

6. *Locate SD Card Socket on the OCU Main Board. There are two types of sockets as shown on the next page.*

7. *To remove the "New Style" SD Card: Double fold a small piece of paper (4 layers) and slide it under the card, then use small flat blade screwdriver against the lip on the end of the card to gently push the card from the socket. For the "Old style": Push in the card slightly and it will eject automatically.*

   NOTE: The new (white) card can be replaced in the old-style push-to- release holder as well.



Old Style



New Style





8. *Examine the card and the socket for signs of contamination and clean gently if needed. Put card back into socket (or install new card provided by TPC if you have one). Remove four nylon screws holding the OCU Mezzanine Board to the OCU Main Board.*

9. *Pull gently up on the Mezzanine Board while wiggling it gently from side to side to remove it from the Main Board. Remove from both connectors simultaneously so as not to twist the board and stress the connectors.*

10. *Locate the SOM socket on the OCU Main Board. There are two versions of the Main Board with different locations for the sockets.*





11. *Release the SOM by gently spreading the black retention levers on the sides of the socket. The SOM will pop up at an angle. NOTE: The SOM is ESD-sensitive. DO NOT remove the SOM entirely from the socket.*

12. *Wiggle the SOM up and down a few times, rotating it in its socket, then gently press it back down until the latches on the sides snap into place.*





13. *Reassemble the unit in the reverse order of disassembly. Return the OCU to the vehicle and re-test. If the problem persists, the SD Card requires replacement.*

Display Communication Troubleshooting:

Perform the following steps to diagnose a display communication failure:

1. *Unplug all the cables from OCU. Remove OCU from vehicle.*

2. *Set the OCU face down on a protective surface so as not to scratch the screen*

3. *Remove the four T8 screws on the rear corners of unit.*

4. *Carefully lift the back cover off the unit. NOTE: There are cables attached to the cover, use caution with splitting. Do not strain cables.*

5. *Remove the three NiMH batteries, take note of orientation for reinstallation.*





6. *Remove the four nylon screws holding the OCU Mezzanine Board to the OCU Main Board.*

7. *Pull gently up on the Mezzanine Board while wiggling it gently from side to side to remove it from the Main Board. Remove from both connectors simultaneously so as not to twist the board and stress the connectors.*

8. *Locate the SOM socket on the OCU Main Board. There are two versions of the Main Board with different locations for the sockets.*





9. *Release the SOM by gently spreading the black retention levers on the sides of the socket. The SOM will pop up at an angle. NOTE: The SOM is ESD-sensitive. DO NOT remove the SOM entirely from the socket.*

10. *Wiggle the SOM up and down a few times, rotating it in its socket, then gently press it back down until the latches on the sides snap into place.*





11. *Unplug the small white speaker connector from the OCU Main Board. Use caution, wire is delicate.*

12. *Unplug WiFi Antenna and GPS Cables from the SOM. Note the location of the connector and the routing of the cable for reinstallation. DO NOT interchange cables.*

13. *Remove the four T8 Main Board to Case screws and lift out the OCU Main Board with the LCD Display attached.*

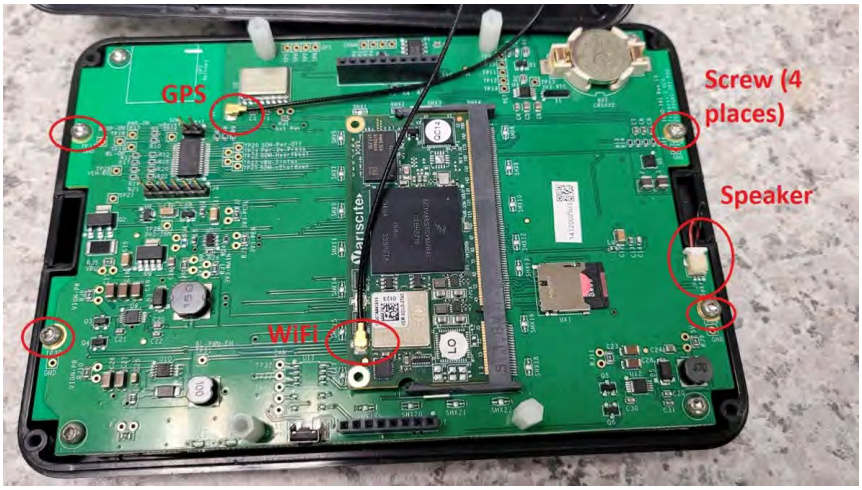



14. *Remove the four T8 Main Board to Display screws and lift the Main Board from the LCD Display.*

    NOTE: There are three cables interconnecting the display and the Main Board, so the LCD Display can not be fully separated at this point.

15. *Unplug the white two wire display backlight connector from the Main Board. The Main Board / Display assembly can now be folded open and will lie flat. Use caution so that the touch screen cable (orange flex-circuit cable) from the LCD Display to the Main Board is not removed from its connector on the Main Board. If this gets pulled out, refer to note at the end of the procedure to reconnect it.*

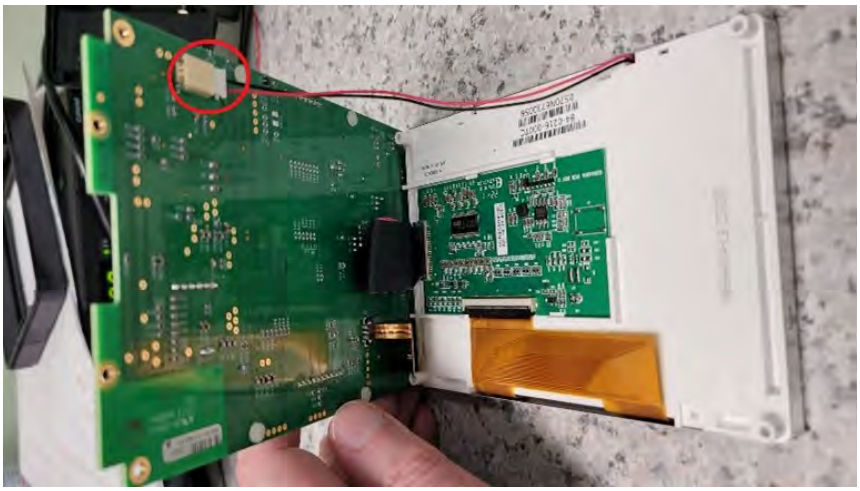

16. *Unplug the Display Cable from the Display*

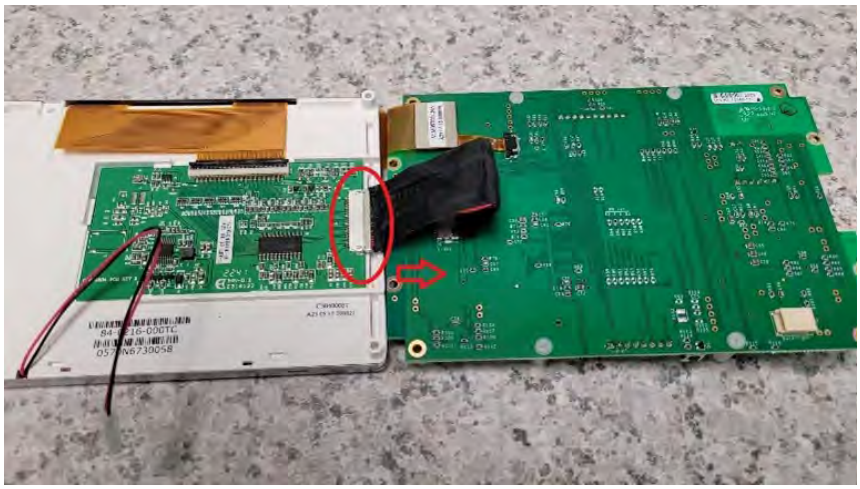

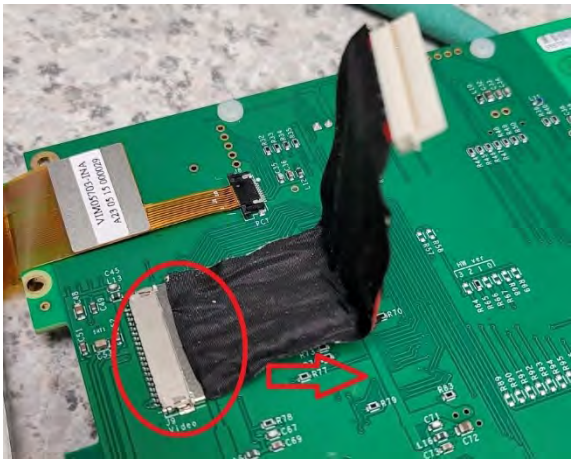

17. *Unplug the Display Cable from the Main Board*

18. *Inspect the Display Cable carefully to see if any sockets in the cable have moved from their fully seated location in the connector housing. If required, contact TPC for a replacement Display Cable. This is a common failure point in early OCU assemblies (up to SSN1700).*

19. *Reassemble the OCU in the reverse order, take care to route cables as they were originally placed.*

    NOTE: DO NOT overtighten the four T8 screws holding the Main Board to the Display. Tighten only enough to prevent movement. Further torque will cause damage to display.

20. *Return unit to the vehicle and re-test. If the problem persists, the entire OCU must be replaced.*

    NOTE: If, unfortunately, the touch screen cable becomes disconnected, reconnect it as follows:

1. *Carefully slide the two connector latches in the direction of the cable (away from the connector body). They only move about 0.050".*

2. *Insert the flat cable end into the connector body. It will only fit one way. Insert it until the plated ends of the ribbon are fully within the connector body.*

3. *While holding the cable into the connector with one hand, use your other hand to close the latches on both sides of the connector simultaneously. A second person with small fingers may be of assistance.*

